DUDLEY KNOX LIBRARY
NAVAL POSTGRADUATE SCHOOL
MONTEREY CA 93943-5101

NAVAL POSTGRADUATE SCHOOL
Monterey, California

THESIS

AIRCREW CENTERED SYSTEM DESIGN ANALYSIS CONSIDERATIONS FOR THE MH-53E HELICOPTER

by

Gregory J. Gibson

December, 1996

Thesis Advisor: Conrad F. Newberry

Approved for public release; distribution is unlimited.

REPORT DOCUMENTATION PAGE

Form Approved OMB No. 0704-0188

Public reporting burden for this collection of information is estimated to average 1 hour per response, including the time for reviewing instruction, searching existing data sources, gathering and maintaining the data needed, and completing and reviewing the collection of information. Send comments regarding this burden estimate or any other aspect of this collection of information, including suggestions for reducing this burden, to Washington Headquarters Services, Directorate for Information Operations and Reports, 1215 Jefferson Davis Highway, Suite 1204, Arlington, VA 22202-4302, and to the Office of Management and Budget, Paperwork Reduction Project (0704-0188) Washington DC 20503.

1. AGENCY USE ONLY *(Leave blank)*	2. REPORT DATE December 1996	3. REPORT TYPE AND DATES COVERED Master's Thesis
4. Aircrew Centered System Design Analysis Considerations For The MH-53E Helicopter		5. FUNDING NUMBERS
6. AUTHOR(S) Gregory J. Gibson		
7. PERFORMING ORGANIZATION NAME(S) AND ADDRESS(ES) Naval Postgraduate School Monterey CA 93943-5000		8. PERFORMING ORGANIZATION REPORT NUMBER
9. SPONSORING/MONITORING AGENCY NAME(S) AND ADDRESS(ES)		10. SPONSORING/MONITORING AGENCY REPORT NUMBER
11. SUPPLEMENTARY NOTES The views expressed in this thesis are those of the author and do not reflect the official policy or position of the Department of Defense or the U.S. Government.		
12a. DISTRIBUTION/AVAILABILITY STATEMENT Approved for public release; distribution is unlimited.		12b. DISTRIBUTION CODE

13. ABSTRACT *(maximum 200 words)*

An analysis was made of the aircrew centered system design aspects for the MH-53E helicopter. These aircrew centered design features included changes in the cockpit, aircraft weight and drag coefficient. The cockpit evaluation compared the current MH-53E cockpit configuration with design changes currently under review by the Navy. This evaluation suggests that the proposed cockpit design display change may reduce aircrew load stress and improve mission effectiveness. Changes in subsystem components may either increase or decrease the weight of the MH-53E. Similarly, changes in crew tasking may result in a need for more or less fuselage volume size. Therefore, the sensitivity of MH-53E performance to generic changes in weight and drag was investigated in order to make source assessment of equipment and crew tasking changes upon MH-53E mission effectiveness.

14. SUBJECT TERMS Aircrew, Centered, System, Design			15. NUMBER OF PAGES 141
			16. PRICE CODE
17. SECURITY CLASSIFICATION OF REPORT Unclassified	18. SECURITY CLASSIFICATION OF THIS PAGE Unclassified	19. SECURITY CLASSIFICATION OF ABSTRACT Unclassified	20. LIMITATION OF ABSTRACT UL

NSN 7540-01-280-5500

Standard Form 298 (Rev. 2-89)
Prescribed by ANSI Std. 239-18 298-102

Approved for public release; distribution is unlimited.

AIRCREW CENTERED SYSTEM DESIGN ANALYSIS CONSIDERATIONS FOR THE MH-53E HELICOPTER

Gregory J. Gibson
Lieutenant , United States Navy
B.S., University of Missouri, 1988

Submitted in partial fulfillment
of the requirements for the degree of

MASTER OF SCIENCE IN AERONAUTICAL ENGINEERING

from the

NAVAL POSTGRADUATE SCHOOL
December 1996

DUDLEY KNOX LIBRARY
NAVAL POSTGRADUATE SCHOOL
MONTEREY CA 93943-5101

ABSTRACT

An analysis was made of the aircrew centered system design aspects for the MH-53E helicopter. These aircrew centered design features included changes in the cockpit, aircraft weight and drag coefficient. The cockpit evaluation compared the current MH-53E cockpit configuration with design changes currently under review by the Navy. This evaluation suggests that the proposed cockpit design display change may reduce aircrew load stress and improve mission effectiveness. Changes in subsystem components may either increase or decrease the weight of the MH-53E. Similarly, changes in crew tasking may result in a need for more or less fuselage volume size. Therefore, the sensitivity of MH-53E performance to generic changes in weight and drag was investigated in order to make source assessment of equipment and crew tasking changes upon MH-53E mission effectiveness.

TABLE OF CONTENTS

I. INTRODUCTION 1

II. THE MCM MISSION 3

A. GENERAL 3

B. DESCRIPTION OF THE AMCM MISSION 4

1. Minesweeping and Minehunting 5

2. Parameters and Terminology 6

3. Operations, Hardware and Processes 7

III. THE MH-53E AIRCRAFT AND MISSION SUBSYSTEM 13

A. THE MH-53E AIRCRAFT 13

B. AMCM MISSION OUTLINE DESCRIPTION 15

C. MISSION SUBSYSTEMS 20

IV. MH-53E CREW MISSION REQUIREMENTS 25

A. STREAM PHASE REQUIREMENTS 25

B. TOWING PHASE 28

C. RECOVERY PHASE 30

D. AMCM CREW COORDINATION 31

V. CURRENT MH-53E COCKPIT 33

A. GENERAL DESCRIPTION OF INSTRUMENTATION 33

B. INDIVIDUAL INSTRUMENT DESCRIPTION 34

C. MH-53E COCKPIT CHANGES 40

VI. THE NEW MH-53E COCKPIT 43

A. GENERAL DESCRIPTION OF INSTRUMENT CHANGES . 43

B. HORIZONTAL SITUATION DISPLAY SYSTEM (HSDS) . . 46

1. HSDS TOW Screen 46

2. HSDS MCM Screen 48

VII. SIMPLIFIED AQS-Q14 MISSION ANALYSIS 51

A. PILOT INFORMATIONAL REQUIREMENTS 53

B. CO-PILOT'S INFORMATIONAL REQUIREMENTS 57

C. TURNING COMPARISON 60

VIII. OPERATION EVALUATION (OPEVAL) 63

A. OPERATION EVALUATION BACKGROUND 63

B. OPERATION EVALUATION RESULTS CLASSIFICATION . 64

C. RESULTS 65

IX. IMPACT OF AIRCREW REQUIREMENTS ON AIRCRAFT DESIGN . 67

A. ROTOR DOWNWASH REDUCTION 67

B. COEFFICIENT OF DRAG REDUCTION 71

X. CONCLUSION 75

XI. RECOMMENDATIONS 77

APPENDIX 79

LIST OF REFERENCES 127

INITIAL DISTRIBUTION LIST 129

I. INTRODUCTION

Through the advent of modern technology, aircraft crew stations provide aircrews with a variety of information, including information related to laser guided weapons, radar, etc. An effective crewstation requires displays, controls and avionics subsystems that enhance the mission effectiveness of the crew.

Today's military helicopters are often tasked to perform a multitude of missions. In addition to the variety of tasks, the complexity of that tasking can make for a challenging aircrew system design. To ensure that the crew is best able to perform these various and complex tasks, it is important that the aircrew system be designed to enhance the aircraft's performance as a weapon system. Thus, helicopter aircrew centered system design is essential.

Of all the missions performed by helicopter aircrews few are as uniquely complex as the Airborne Mine Countermeasures (AMCM). The focus of this thesis is the analysis of changes and suggested improvements in AMCM crewstations that may lead to an improvement in the effectiveness of the AMCM mission from a crew centered system design perspective.

II. THE MCM MISSION

A. GENERAL

There are primarily two ways to detect a sea mine, and one of them puts a hole in your ship. Mine Countermeasures (MCM) is the search, detection and neutralization of sea mines. The platforms by which the Navy accomplishes this mission is primarily performed by surface ships and helicopters. The ships that perform the MCM mission do it by primarily towing devices behind the ship that search or help neutralize mines (sonar, magnetic coils,etc). The MCM performed by helicopters is properly referred to as the Airborne Mine Countermeasures (AMCM) and is performed by the helicopter towing devices through the water which search or help neutralize mines (sonar, magnetic coils,etc).Since there are a variety of AMCM devices, for purposes of clarity they are collectively referred to as a "towed body." The AMCM towing subsystem uses a cable, with one end is attached internally to the aft end of the helicopter and the other end is attached to the "towed body."

The Airborne Mine Countermeasures (AMCM) is currently performed by the MH-53E helicopter. The AMCM mission is particularly unique in that it requires a substantial degree of crew coordination to facilitate mission success. Thus, the effective use of airframe systems to search detect and neutralize sea mine threats requires a thoroughly integrated aircrew centered system planform design.

B. DESCRIPTION OF THE AMCM MISSION

The following discussion provides a description of relevant AMCM parameters and mission aspects. The primary mission phases are composed of three consecutive phases of activity termed *streaming, towing & recovery.*

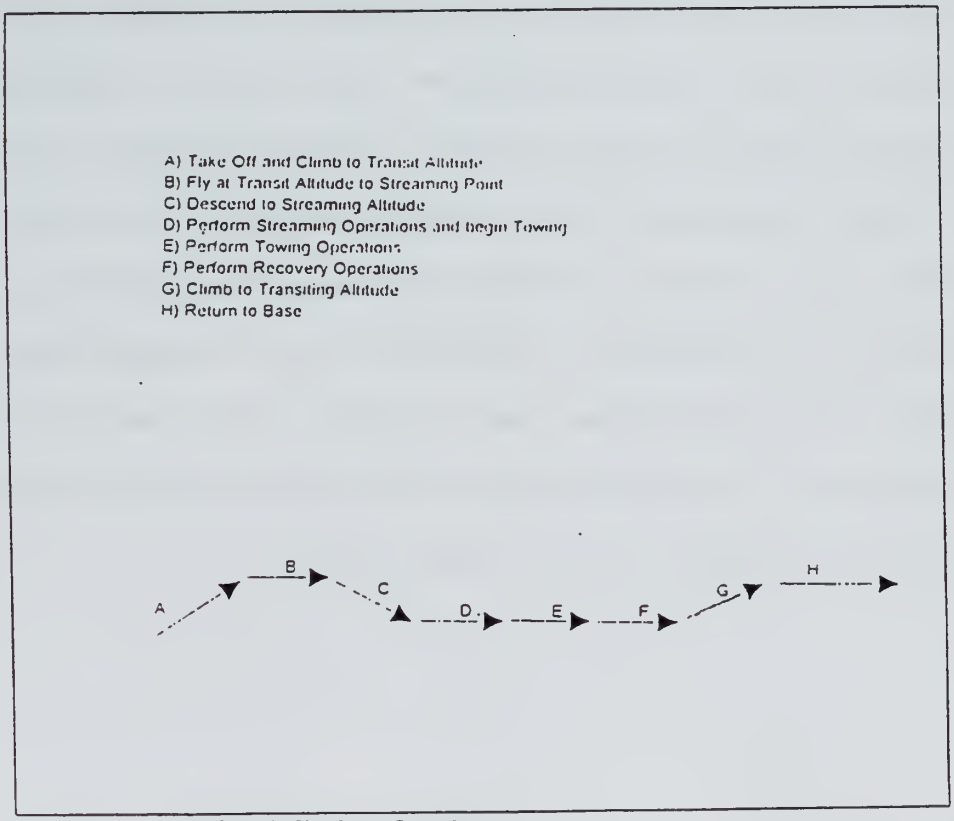

Figure 1 AMCM Mission Outline

For clarification Fig (1) depicts an outline of a typical AMCM mission which includes the previously mentioned mission phases.

1. Minesweeping and Minehunting

The AMCM mission is primarily composed of either one of two tasks: *minesweeping or minehunting*.

Minesweeping is the act of neutralizing mines or mine threats. Minesweeping is performed mechanically by towing cables equipped to cut the mooring chains of moored mines Fig (2).

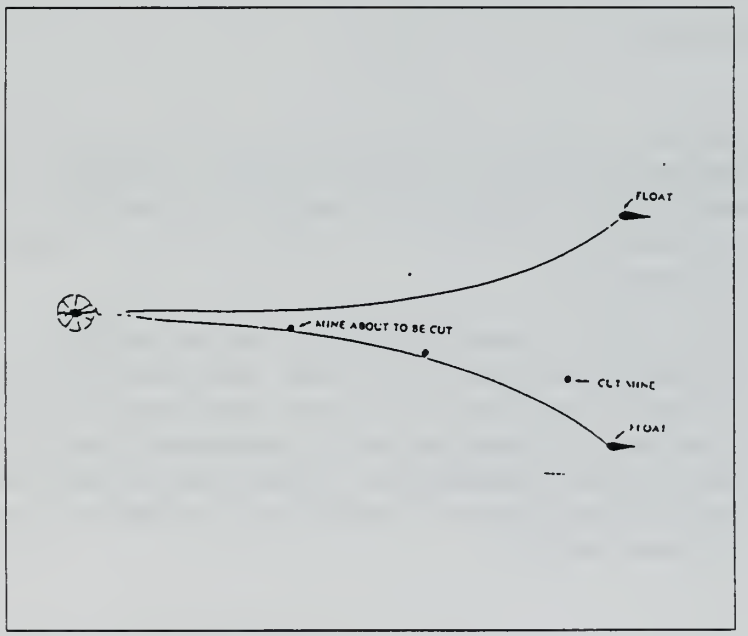

Figure 2 Mechanical Minesweeping

Minesweeping is also performed influentially by towing devices that create false magnetic, acoustic or pressure signatures that are needed to explode influence mines.

Minehunting is the act of actively searching for mines primarily with the use of sonar devices. Minehunting is often used to search for specific mine types in a known mine danger area.

2. Parameters and Terminology

The AMCM mission has uniquely specialized terminology and operating parameters. For the purpose of clarity the following crew member functional definitions are used in the following sections of this thesis.

- *Pilot:* The person in the cockpit physically at the controls of the aircraft. His/Her tasks include but are not limited to maintaining aircraft velocity, heading and altitude parameters.
- *Co-Pilot:* The person in the cockpit not in physical controls of the aircraft. The co-pilot's responsibilities include but are not limited to navigating, operating avionics and performing necessary checklists. The co-pilot must also assume the pilots role in the event of an emergency.

- *Aircrewmen :* The enlisted personnel who perform all tasks in the aft portion of the helicopter necessary to complete a mission. Aircrewmen tasks include but are not limited to operating winches, hoists and cables that are attached to the "towed body".

- Load Stress: The stress (workload) imposed by increasing the number of channels (or sources) over which information is displayed to an observer.

3. Operations, Hardware and Processes

The following is a description of the Operations, Hardware and Processes that are unique to the AMCM community.

- *Tension*: The tensile force in the cable connecting the helicopter to the "towed body."

- *Tow Boom:* The tow boom is essentially the device which attaches the "towed body" cable to the MH-53E Fig (3). The tow boom is typically fixed to the aircraft in the cabin ceiling. The free end is allowed to pivot from the level position to the cabin floor as well as 30 deg left/right of centerline as illustrated in Fig(4).

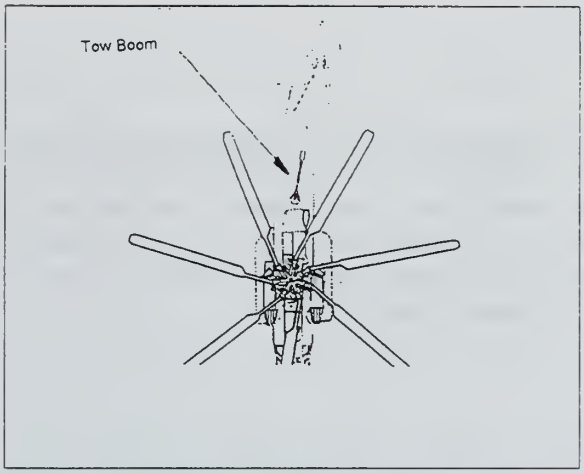

Figure 3 Tow Boom (Top View)

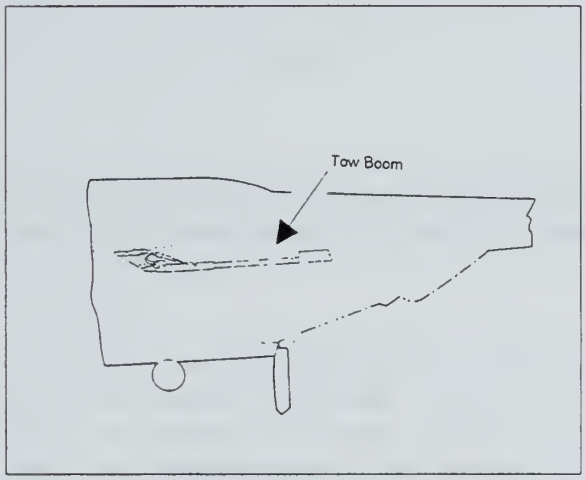

Figure 4 Tow Boom (Side View)

- *Skew:* The measured angle that the tow boom makes left or right of the aircraft's centerline during tow operations Fig (5). The skew must be monitored by the pilot during tow operation to ensure the "towed body" is properly positioned behind the aircraft.

- *Drift*: Very slow flight usually less than 15kts. Drifting is usually initiated from a hover and can occur in any direction (forward, backward or laterally).

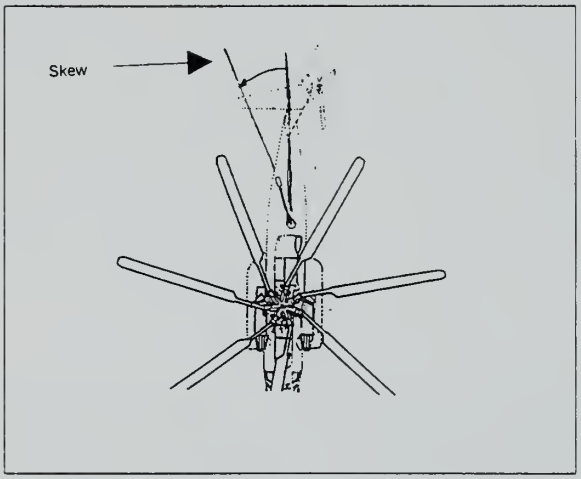

Figure 5 Skew

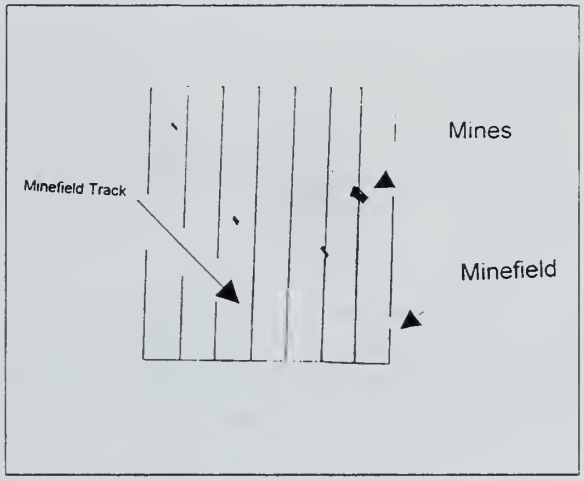

Figure 6 Minefield Track

- *Minefield Track:* The intended flight path of the aircraft and the towed body during AMCM operations Fig(6). One of the primary tasks of the pilot during AMCM operations is to ensure that the aircraft flight path has a minimum deviation from the minefield track. Minefield tracks within a given minefield are discerned from one another by track numbers .

- *Yards to Remaining*: The distance "a" remaining to the opposite end of the minefield Fig (7). Once the aircraft and "towed body" have transited this distance the process of turning the aircraft and "towed body" commences.

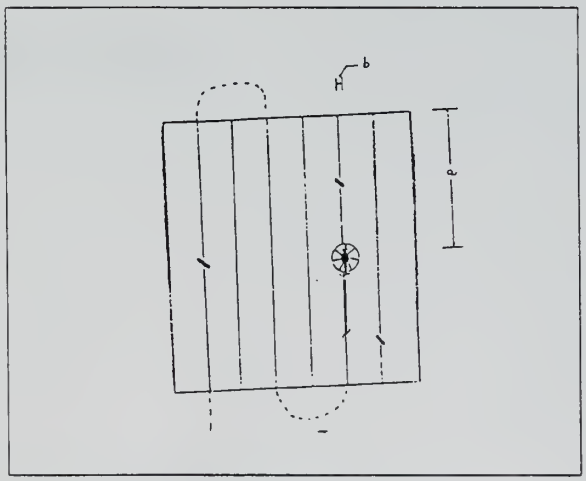

Figure 7 Yards Remaining

III. THE MH-53E AIRCRAFT AND MISSION SUBSYSTEM

A. THE MH-53E AIRCRAFT

Currently, the MH-53E Super Stallion is the U.S. Navy's sole airborne mine countermeasures (AMCM) aircraft. While other aircraft have been used in the past, the MH-53E's superior size and power has made it the aircraft of choice for the AMCM mission. The aircraft is manufactured by Sikorsky Aircraft,a Division of United Technologies, located in Stratford Connecticut Fig (8), (NAVAIR,1993).

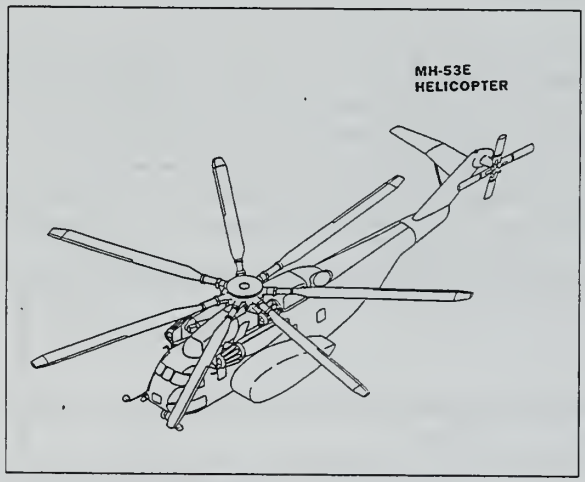

Figure 8 MH-53E

Some of the MH-53E design specifications and standard sea level performance characteristics are as follows (NAVAIR,1993).

Geometric Parameters		
Length	99ft	½ in
Height	28ft	4in

Table (1) Geometric Parameters

Rotor Parameters	Main	Tail
Radius (ft)	39.500	10.00
Chord (ft)	2.440	1.28
Blade No	7.000	4.00
Solidity	0.163	0.138
Tip Speed (ft/s)	732	733
Airfoil Type	SC1095	NACA 0015

Table (2) Rotor Parameters

Aircraft Characteristics
Engines:3, T64-GE-416A @ 4380 SHP each
Max. Cruise: 150 kts
Max. Rate of Climb: 2,500 fpm (with 25,000 payload)
Max Gross Wt : 69,750 lbs.

Table (3) Aircraft Characteristics

B. AMCM MISSION OUTLINE DESCRIPTION

A schematic of a typical AMCM mission is depicted on Fig (9). As noted above, primary mission phases are composed of Streaming, Towing and Recovery.

Stream Phase: The first phase of the AMCM mission involves the deployment of the "towed body" from the aircraft into the water before reaching the minefield. The process of streaming a "towed body"is physically accomplished by the actions of the aircrewmen.

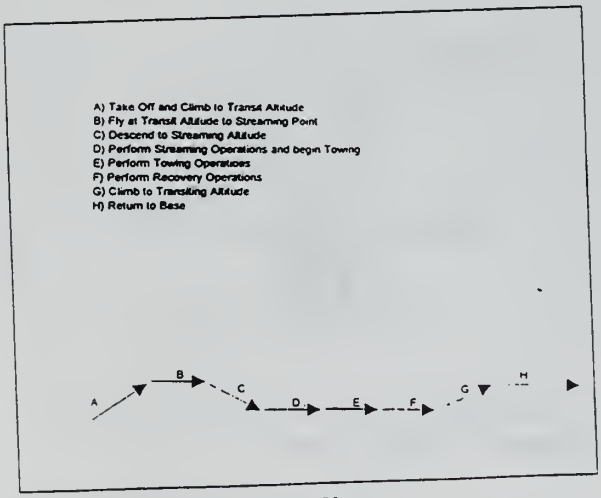

Figure 9 Mission Outline

The aircrewmen tasks primarily involve physically getting the "towed device" out of the aircraft into the water and back onto the aircraft. The aircrewmen essentially operate winches located in the aft cabin area which pay out cables attached to the "towed body". Only after the "towed body" enters the water can the AMCM operations of mine sweeping or minehunting begin. The aircrewmen perform the majority of their tasks in the aft cabin area as depicted in Fig (10). During the *Streaming Phase* the pilot's primary task is to fly the aircraft as dictated by NATOPS procedures, in such a way as to prevent oscillations of the "towed body." The primary mission objective during the stream phase is the minimization of the time required to stream the "towed body." Accomplishing this objective helps to maximize the time spent towing in the minefield.

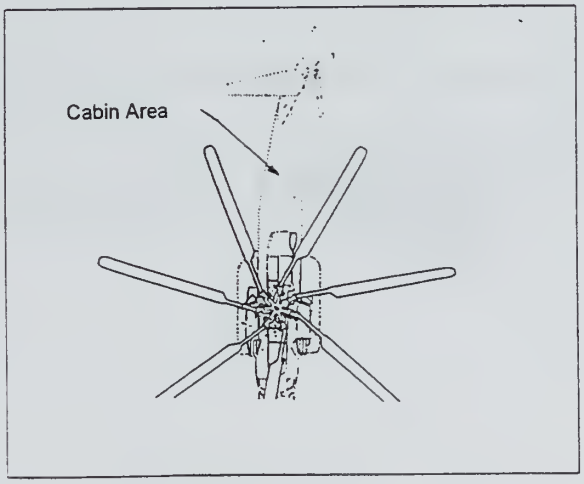

Figure 10 Cabin Area

Figure (11) depicts the aircraft position during streaming phase of an AMCM mission.

Towing Phase: As noted above the second phase of the mission is that in which the minehunting and/or minesweeping activity takes place. Figure (12) depicts the aircraft operating in the towing phase of an AMCM mission. During this phase the aircrewmen are primarily visually monitoring the "towed body". The primary objective during the towing portion of the mission is for the pilot to fly an accurate minefield track with the proper ground speed, tension and skew parameters.

Recovery Phase: The process of bringing aboard the towed body onboard the aircraft, ship, or beach line from which it was initially released. The recovery phase can essentially be thought of as the *Streaming Phase* in reverse.

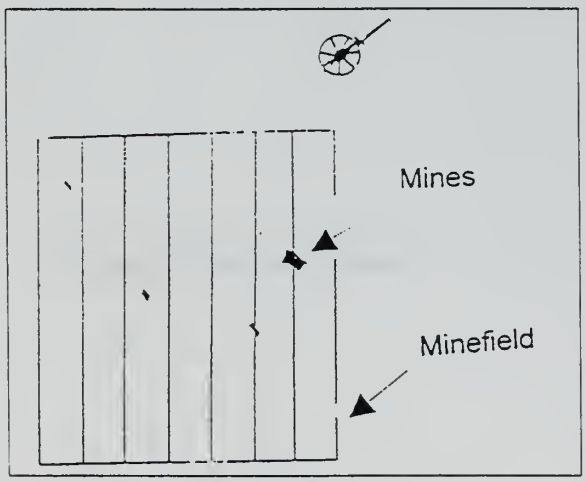

Figure 11 Streaming Phase

The pilot once again must fly the aircraft in such a way as to prevent oscillations while the aircrewmen winch in the "towed body". Figure(4) depicts the aircraft operating in the recovery phase of an AMCM mission.

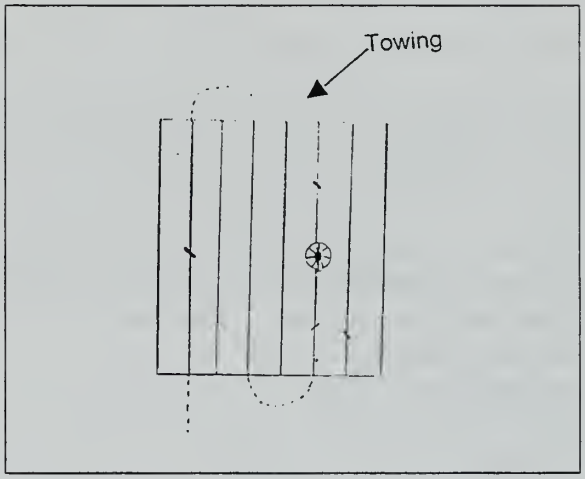

Figure 12 Towing Phase

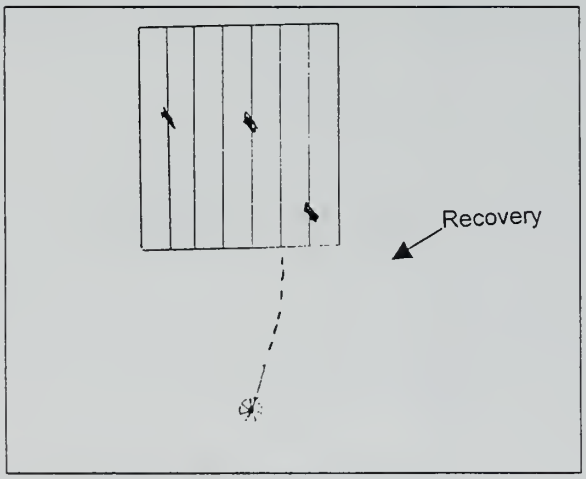

Figure 13 Recovery Phase

C. MISSION SUBSYSTEMS

The MH-53E accomplishes the minesweeping/mine hunting tasks by towing a device containing several subsystems, which are attached internally to the aft end of the helicopter, through the water. The following is a list of the subsystems used for AMCM minesweeping/minehunting tasks.

- MK-103: Mechanical wire sweeping apparatus used for moored mines. The MK-103 Fig(13) accomplishes it's mission by cutting the submerged chain of a moored mine with explosive cutters. After the mooring chain is cut the mine rises to the surface of the water.

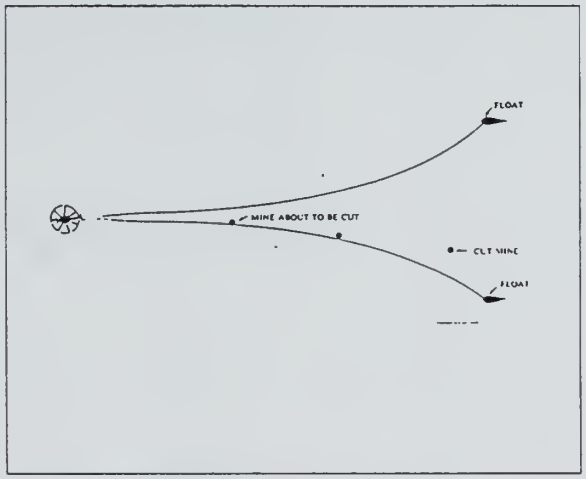

Figure 14 MK-103

- MK-104: Acoustic signal generating device which generates acoustic signals via the venturi effect. The MK-104 generates an acoustic signature that emulates a vessel moving through the water.

- MK-105 : A Hydrofoil sled capable of producing a magnetic signature that emulates the magnetic signature of a vessel Fig (15). This system can be combined with the MK-104 to sweep magnetic/acoustic influence mines.

- AN/AQS-Q14 : Down and side looking sonar device used for locating bottom and moored mines Fig (16).

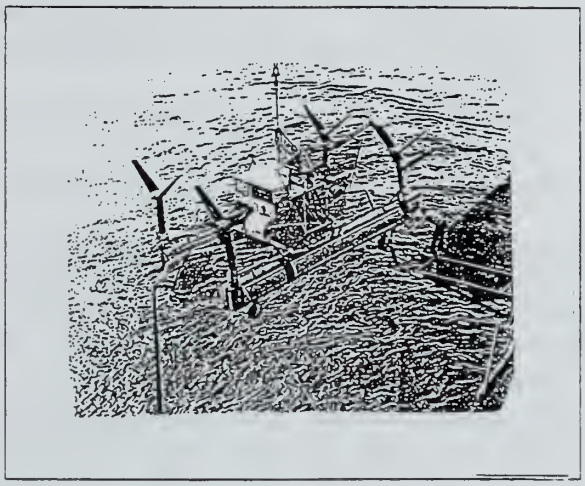

Figure 15 MK-105

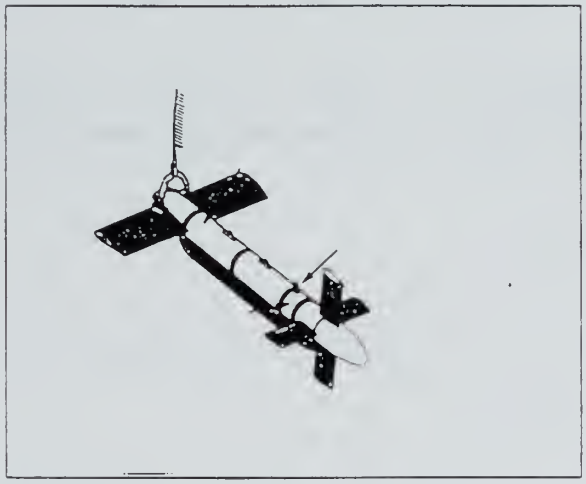

Figure 16 AN/AQS-14

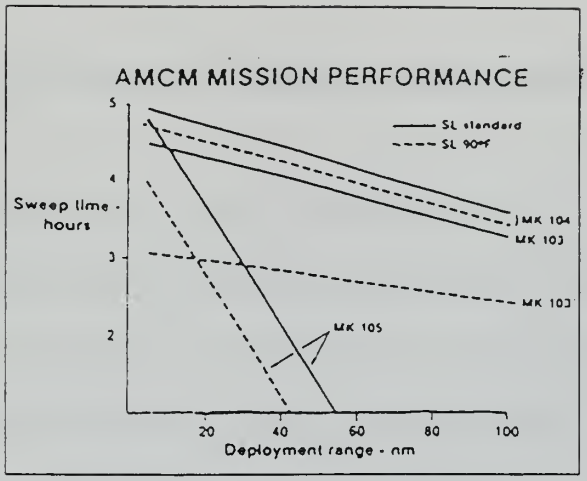

Figure 17 Mission Time

The AMCM subsystem time on station is unique for each particular device and varies linearly with the distance aircraft must travel to the minefield. Secondly, the time on station is distinctive because each "towed body" used has a unique approximate streaming time. The maximum minesweeping/minehunting time for most missions is approximately 4.7 hrs Fig (17). Finally, the AMCM towing capability is limited to a steady state tension of 25,000 lbs with a surge capacity of 30,000 lbs (NAVAIR,1993).

IV. MH-53E CREW MISSION REQUIREMENTS

As noted above the typical AMCM mission is executed in three phases Streaming, Towing and Recovery. As a reminder the person designated as the *"pilot"* is the person physically at the controls of the aircraft and the *"co-pilot"* is the person not in physical control of the aircraft. Lastly the *"aircrewmen"* are the enlisted personnel who perform all tasks in the aft portion of the helicopter necessary to complete a mission (i.e., sonar operation, device handling, etc.).

A. STREAM PHASE REQUIREMENTS

Stream Phase: The first phase of the mission involves the deployment of the "towed body" from the aircraft, ship, or beach line. Two of the primary objectives during the stream phase are the minimization of both the stream time and distance to the minefield Fig (11). Accomplishing these two objectives helps to maximize the time spent towing in the minefield. Fig (18) depicts the relative streaming position of a "towed body".

During the stream phase the pilot's tasks are concerned primarily with those things he must accomplish to provide the "best platform" to stream the "towed body."

The pilot is concerned with flying the correct altitude(s), heading(s) while maintaining the appropriate ground speed for streaming the "towed body". In addition to heading, altitude and ground speed cues, the pilot must also comply with the audio inputs from the enlisted aircrewmen directing the flight of the aircraft from it's aft section. This directing of the aircraft during the stream may require the pilot to *drift* the aircraft as a means of stabilizing the "towed body" as it is lowered from the aircraft to the water. Outside the cockpit the pilot must be cognizant of the wind direction and the status of the "towed body" which he can acquire from looking into the aft facing mirrors Fig (19).

The co-pilots' function is primarily to maintain oversight of the entire mission and to communicate the proper information to the pilot, aircrewmen and the air traffic controlling agencies at the appropriate time. The co-pilot's additional responsibilities include advising the pilot, navigating, and controlling all avionics (e.g., checklists, channel switching, etc.)

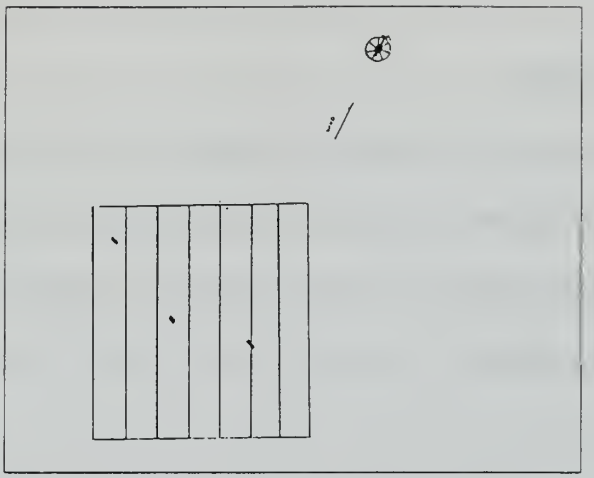

Figure 18 Relative Streaming Position

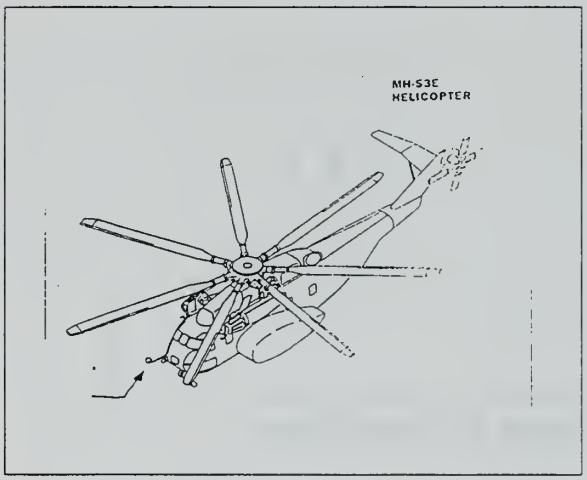

Figure 19 Mirrors

B. TOWING PHASE

Towing Phase: The second phase of the mission is that in which the active minehunting and/or minesweeping takes place. Fig (20) depicts the aircraft operating in the towing phase of a mission.

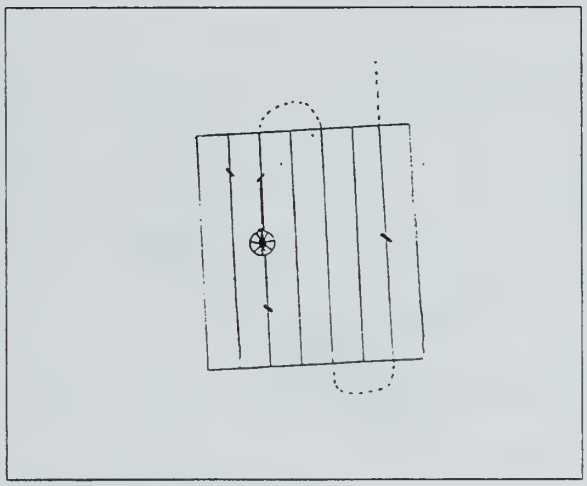

Figure 20 Towing Phase

During the towing phase of the mission the pilot's tasks include the acquisition of information he/she must have to properly tow the gear within the proper limits of *ground speed, tension* and *skew*. The pilot is also concerned with the aircraft's position in the minefield.

To facilitate accurate minesweeping/minehunting, the pilot must stay on the minefield track. Therefore, he must be cognizant of the aircraft position relative to the minefield track Fig (21). Near the successful completion of each minefield track, the pilot must be cognizant of the yards remaining on the present track, the direction to begin turning for the subsequent track, and the distance to the subsequent track.

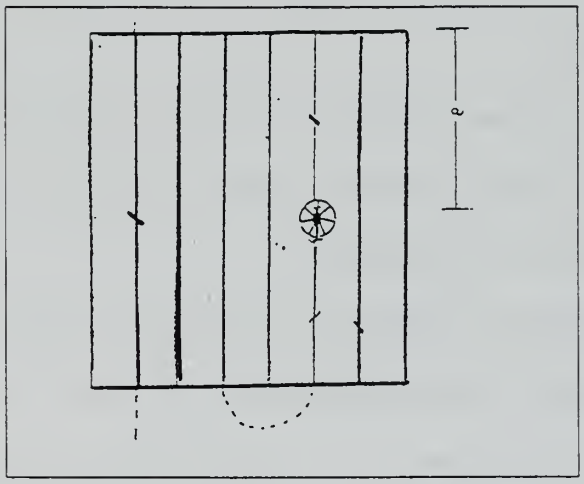

Figure 21 Minefield Track Position

Once the pilot has commenced the turn, he/she must have some indication of the rate of closure upon the successive track. This rate of closure information is critical to ensure towing accuracy and minimization of time outside the minefield.

During the towing phase of an AMCM mission the co-pilot requires that information necessary to advise the pilot of the minefield track prosecution sequence. This information includes the subsequent track number, relative distance, etc. Additionally, the copilot must continue to support the pilot by providing a back up scan to all cockpit instrumentation. Lastly, the co-pilot must maintain his communication with the air traffic controlling agencies and any conflicting shipping traffic, as necessary.

C. RECOVERY PHASE

Recovery Phase: The process of bringing aboard the towed body onboard the aircraft, ship, or beach line from which it was initially released.

During the recovery phase the flying aspects of the mission are much like the stream phase in that the pilot must provide the most steady aircraft platform possible to recover the "towed body." Similarly, the co-pilot's requirements mirror those required during the stream phase.

D. AMCM CREW COORDINATION

Any analysis of AMCM crewstations would not be complete without mentioning of crew coordination requirements inherent to the mission. The primary reasons for the amount of coordination necessary is largely due to crew size & mission procedures. Crew size includes 2 pilots and from 2 to 5 enlisted aircrewmen. The number of aircrewmen is a function of the type of "towed body" used. Plainly put, the pilots coordination between themselves and the crewmen is crucial to ensure mission safety.

V. CURRENT MH-53E COCKPIT

A. GENERAL DESCRIPTION OF INSTRUMENTATION

The current instrument panel illustrated in Fig (22) is labeled with numbers to identify which instruments are used by a pilot performing an AMCM mission. The following text provides a brief description of what type of information is furnished to the pilot by each individual instrument.

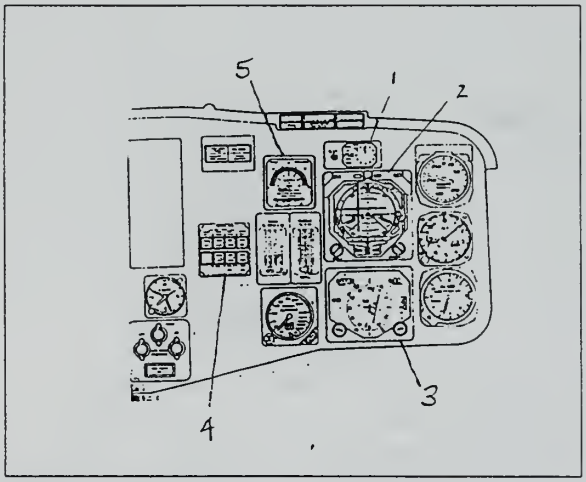

Figure 22 Pilot Instrument Panel

B. INDIVIDUAL INSTRUMENT DESCRIPTION

(1) *Ground Speed Drift Angle* Indicator (GSDA)

Drift Direction: An arrow indicates the direction in which the aircraft is moving (drift). Ground Speed is also numerically read out in kts Fig (23)(NAVAIR,1993).

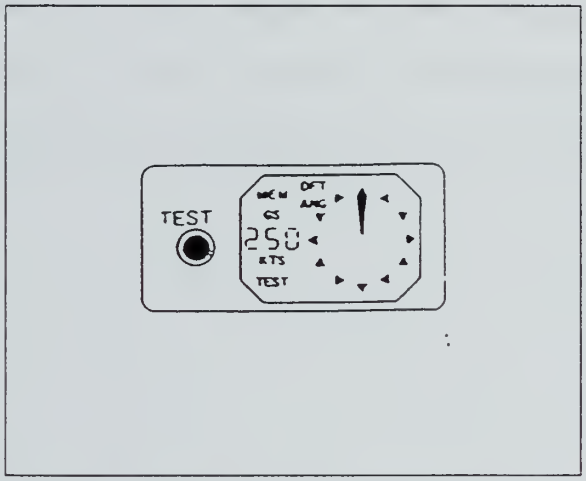

Figure 23 GSDA

(2) *Attitude Directional Indicator*(ADI)

The two ADI's installed on the instrument panel visually indicate the helicopter's pitch, roll attitude, turn rate, slip and navigational information Fig( ). For AMCM navigation the horizontal bar indicates the relative ground speed and the vertical bar acts as a "steer to" bar to remain on the minefield track .(NAVAIR,1993) See Fig(24).

(3) *Horizontal Situation Indicator(HSI)*

The two HSIs installed on the instrument panel Fig(25), present a plan view of the navigational situation as if a pilot were looking down from above the helicopter. The instrument consists primarily of a rotating compass card, two bearing pointers, a heading indicator and course deviation indicator,(NAVAIR,1993).

(4) *Mode Selector Panel*

Two mode selector panels marked MODE SEL are on the instrument panel Fig (26) to allow each pilot to select the source of heading and attitude reference to their respective ADI and HSI. These selector panels allow each pilot to select his/her preferred navigation source (i.e. VOR, TACAN, etc)(NAVAIR,1993).

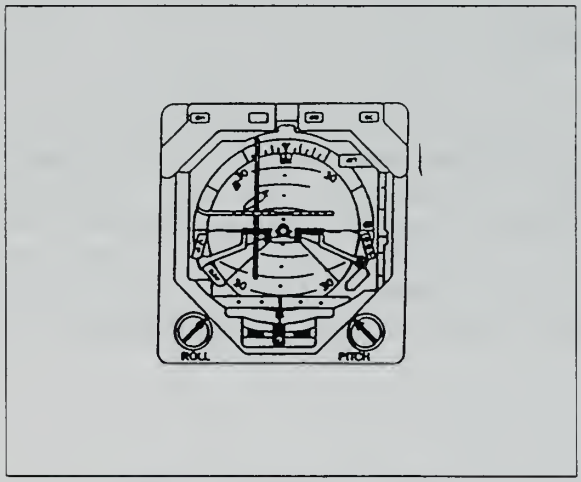

Figure 24 ADI

(5) *Tension Skew Indicator(TSI)*

During the towing portion of the mission this instrument provides the pilot with tow tension and skew angle information. The arced LCD tension scale in the upper center of the indicator provides two parallel displays.

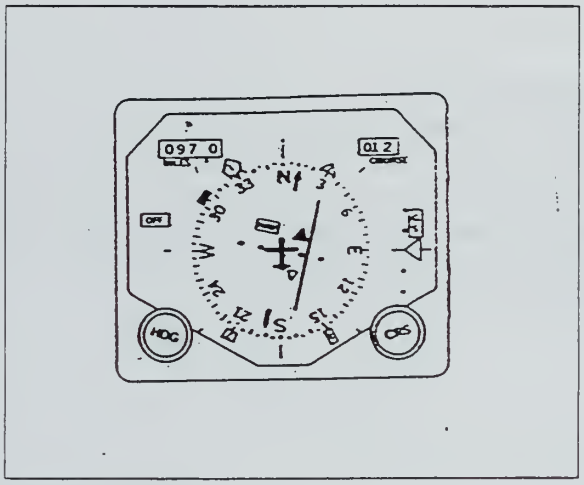

Figure 25 HSI

The upper scale is divided into segments from 0 to 40 x 1000 representing 1000 lbs each. The lower scale is divided into segments from 0 to 6 x 150 lbs each . The lower portion of the indicator provides a LCD scale showing skew angle from 12 degs left to 12 degs right. Below the scale indices at 1 deg increments are shown from 10 left to 10 right with 10, 0, and 10 marked Figures Fig (15)(NAVAIR,1993).

(6) *VO-30*

The VO-30 located in the console serves to indicate relevant minefield distance (e.g. yards left of track, yards to go, etc) . The VO-30 indicates numerically the aircraft distance from track and the distance to the end of the minefield. The VO-30 also indicates with bars the "fly to" direction. Additionally, the azimuth direction of the minefield and the track number is also indicated Fig(16)(NAVAIR,1993).

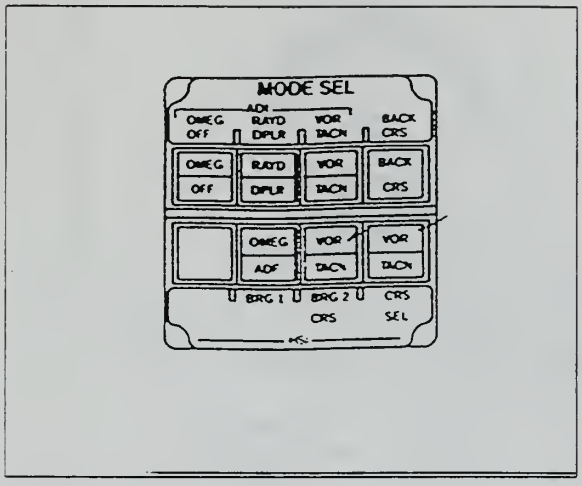

Figure 26 Mode Select Panel

(7) *Global Positioning System (GPS)*

The current global positioning system located in the cockpit console section provides precise navigation information in latitude/longitude. The current GPS system is capable of storing and providing the necessary navigation information to fly to preset navigation points Fig (17). The Global Positioning System provides the precise navigation necessary to conduct AMCM missions (NAVAIR,1993).

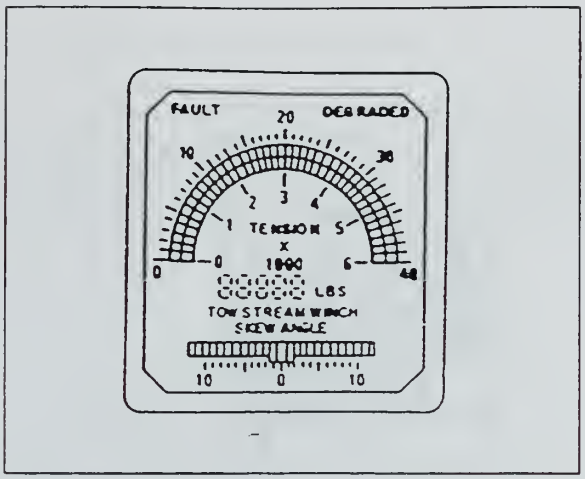

Figure 27 TSI

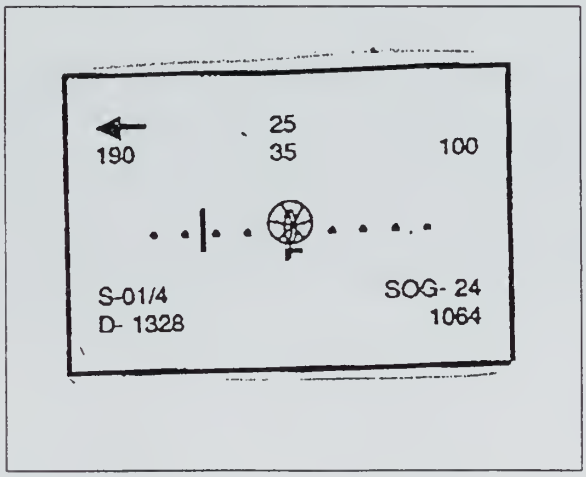

Figure 28 VO-30

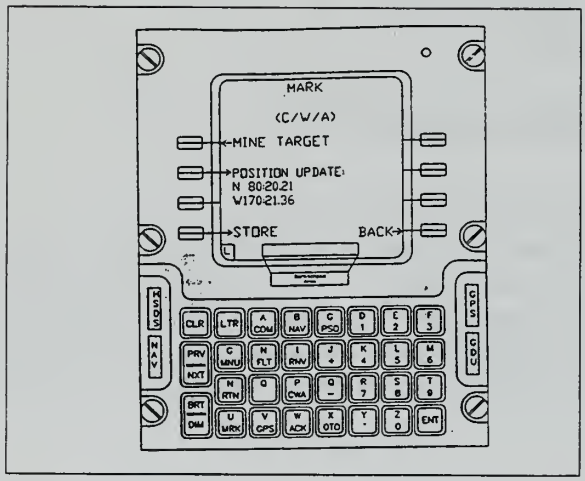

Figure 29 GPS

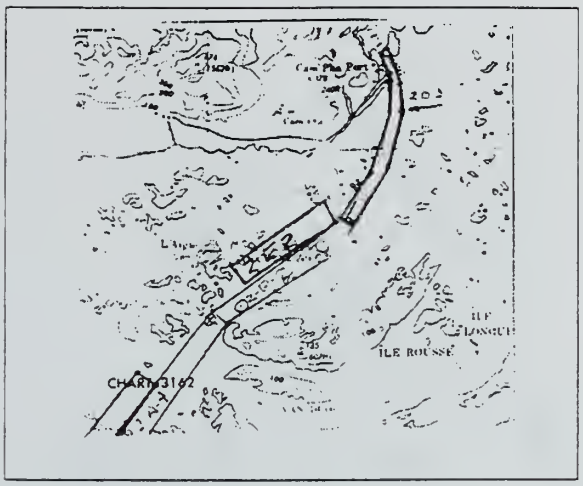

Figure 30 Navigation Charts

(8) *Standard Nautical Charts*

Included in the navigation charts for each AMCM mission is a standard nautical chart . The nautical chart includes the layout of the minefield azimuth and relative size. The chart also depicts pertinent hazards to navigation (e.g. reefs, buoys, and shipping channels, etc.) Fig(30) (NAVAIR,1993).

C. MH-53E COCKPIT CHANGES

The MH-53E helicopter in its present state has a very high workload cockpit. Recently, a major design change to the MH-53E cockpit has been built and evaluated . This new "glass cockpit" known as the MH-53E Navigation/Communication System (NCS) is the most significant change to the Airborne Mine Countermeasures (AMCM) community since the use of global positioning system (GPS) navigation and should prove just as valuable.

The design changes in the MH-53E cockpit are primarily the replacement of navigation instruments that depict the helicopter's horizontal situation. This design change is unique in that this is the only aircraft in recent times where the cockpit has been vastly altered, but the mission and exterior aircraft design has remained unchanged .

VI. THE NEW MH-53E COCKPIT

The design changes in the MH-53E cockpit are primarily the replacement of navigation instruments that depict the helicopter's horizontal situation.

A. GENERAL DESCRIPTION OF INSTRUMENT CHANGES

The new MH-53E cockpit layout is shown in Fig(31). A contrast of the current cockpit and the new cockpit is featured in Fig (32). The old cockpit contains several instruments that were duplicated on both sides of the cockpit (i.e., airspeed indicator, attitude gyro, etc. The new cockpit design called for the removal of some dual instruments from both sides of the cockpit, and yet other instruments were only removed from a single side. Table (4) contains the list of instruments which were removed from the current cockpit.

Instrument	Left Side	Right Side	Both Sides
HSI	---	---	Removed
Mode Select Panel	---	---	Removed
TSI	Removed	---	---
AMCM Caution Advisory Panel	Removed	---	---

Table (4) Instruments Removed

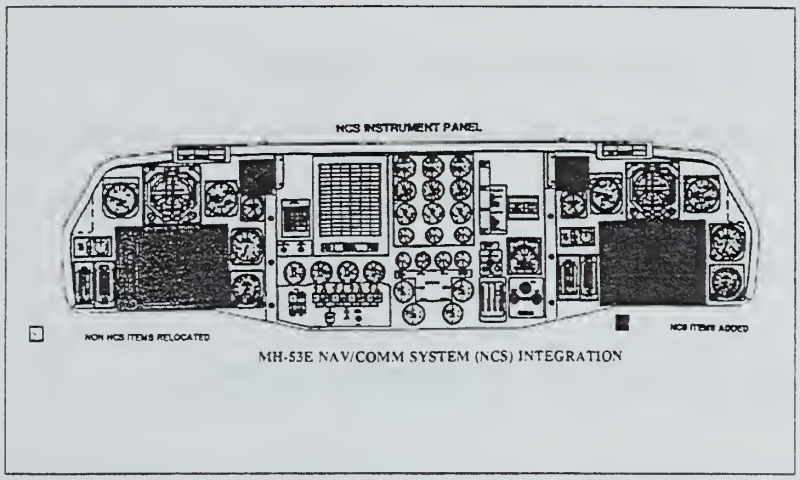

Figure 31 New Cockpit Layout

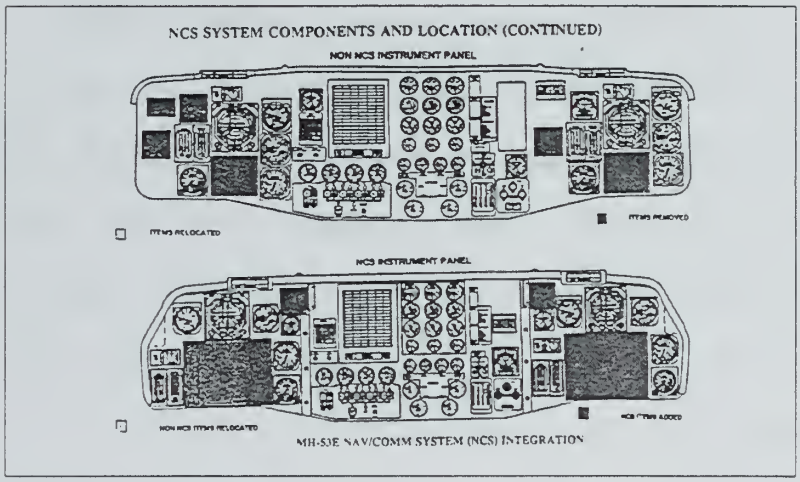

Figure 32 Cockpit Contrast

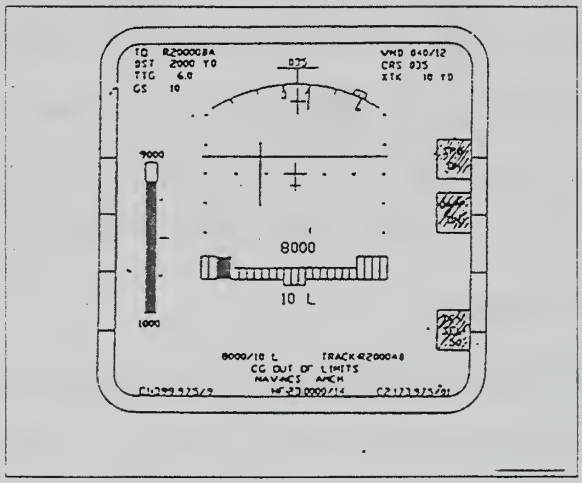

Figure 33 HSDS

The New cockpit primary horizontal reference instrument is the Horizontal Situation Display System (HSDS). The HSDS displays are located in position formerly occupied by the HSI's Fig(33).

B. *HORIZONTAL SITUATION DISPLAY SYSTEM* (HSDS)

Two HSDS displays are installed in the new instrument panel, one each side of the instrument panel. screens. The HSDS provide the pilots with aircraft attitude and horizontal directional information.

The HSDS provides the aircraft attitude and horizontal directional information to the pilots by allowing greater than 17 different screens to be displayed. The two screens used for AMCM operations of the HSDS are the TOW and MCM screens (NAVAIR,1994).

1. HSDS TOW Screen

The HSDS *TOW* screen provides a moving map around an aircraft symbol in the center of the screen. For most AMCM operations the *TOW* screen will be primarily used by the co-pilot .The HSDS TOW screen displays also include symbols for minefield/towing operations. Figure (34) illustrates the moving map display with the current minefield and minefield track number in the middle of the screen. The current tension/skew text is the "1000/2 R" at the bottom center of the display in Fig (34). Adjacent to the tension skew text is the text indicating the current minefield track. The center of gravity text is illustrated directly below the tension/skew text.

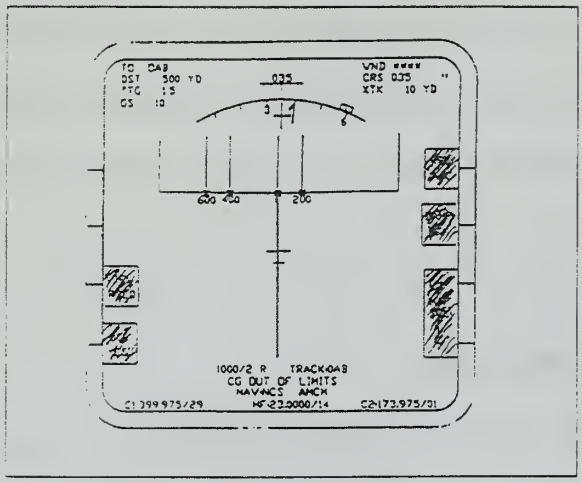

Figure 34 HSDS TOW Screen

The text indicating the navigation system and mission type are illustrated directly below the center of gravity text. The bottom line of text in Fig (34) designates the radio sources and frequencies. The Tow screen features in the top left of the screen include information such as the distance to the opposite end of the field, *Distance To* (DST); the time to travel to the end of the *minefield, Time-To-Go* (TTG); and the *Groundspeed* (GS) . The text in the top right of the screen notes the direction and speed of the wind (WND), the *Commanded/Desired* course(CRS), and the *Cross-Track Deviation* (XTK). The "X" on each mine track indicates the track that is to be flown.

The darkend blocks on the right and left of the screen are the display control keys. The analysis of the display controls are beyond the scope of this thesis. Additionally, the minefield map will display a turn path computed by the NCS based upon device type and track separations (NAVAIR,1994).

2. HSDS MCM Screen

The HSDS *MCM* (Mine Countermeasures) screen provides a compass rose, tension/skew and the minefield track number. For most towing operations, the MCM screen is primarily used by the pilot. These displays include a tension manometer, a skew bar, tension/skew text, cross track deviation bar and a ground speed deviation bar Fig(35).

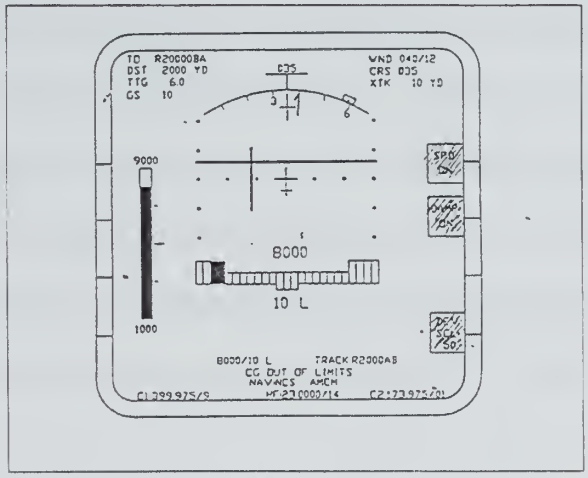

Figure 35 HSDS MCM Screen

The tension manometer is the vertical bar on the left of Fig (35). The tension manometer provides an illustration of the current tension along with the tension limits numerically indicated at the top/bottom of the bar.

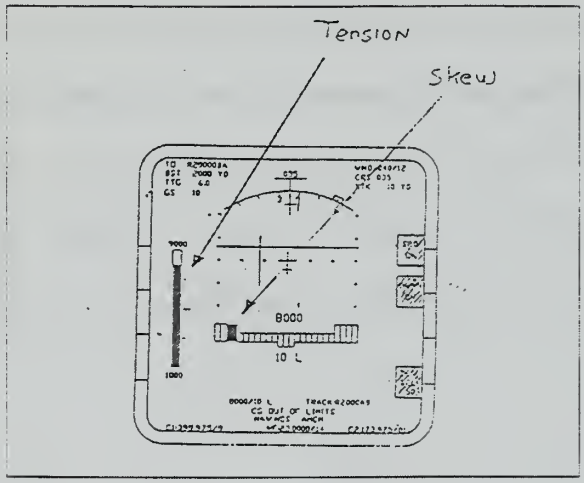

Figure 36 HSDS MCM Screen

The skew bar displays a scale graduated in degrees left to right, with a lighted block that moves left or right of center proportional to tow boom skew. Tension is displayed in the text above the skew bar to the nearest 100 lbs. Skew text is displayed below the skew bar indicating degrees left or right in Fig (37). The cross track deviation bar is centered about the aircraft symbol located in the center of the HSDS display.

The cross-track deviation bar represents the current track and deflects left or right. The bar is displaced proportional to the distance between the aircraft and the current minefield track as defined by the scale markings. The ground speed deviation bar and scale is centered about the aircraft symbol, at the center of the HSDS display. The ground speed deviation bar deflects forward or aft of the aircraft to indicate the aircraft groundspeed as slower (forward) of faster (aft) than that selected. The darkened blocks to the right are display control keys. The analysis of the display control keys are beyond the scope of this thesis.

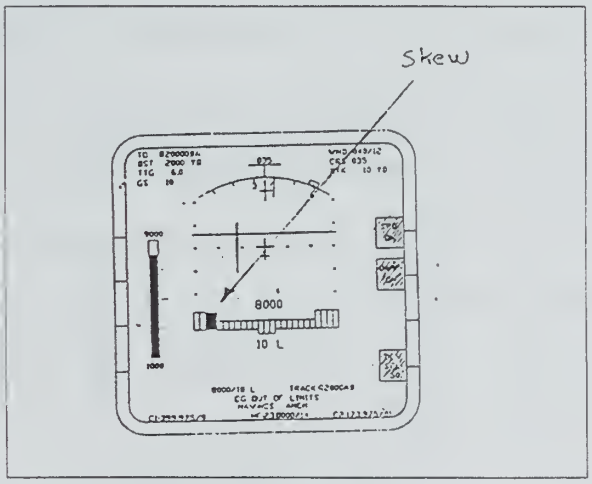

Figure 37 Skew Indication

VII. SIMPLIFIED AQS-Q14 MISSION ANALYSIS

In order to gain a more comprehensive view of how the current cockpit compares to the new NCS Glass cockpit, a partial Mission Task Analysis is illustrated in the following text. The upcoming mission task analysis serves to highlight some of the differences in the two cockpits as some of the primary mission tasks are performed.

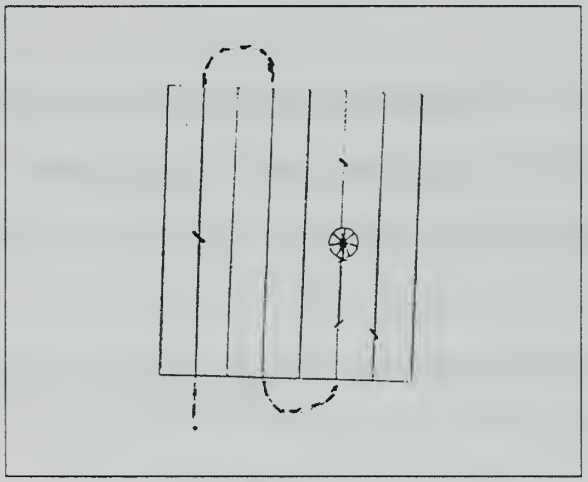

Figure 38 Infield Towing

This analysis should serve to highlight the noted cockpit differences in the performance of an AQS-Q14 mission. The phase of the mission chosen for comparison is the towing phase at two distinct parts of the phase, those being "in field towing" Fig (38) and "turning" Fig (39).

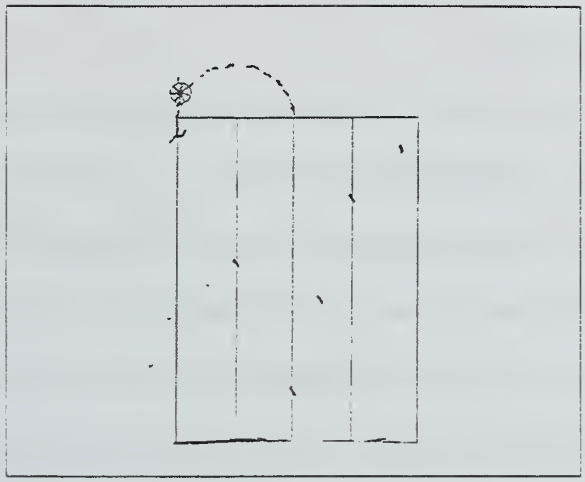

Figure 39 Turning

These two regimes of the towing phase were chosen because they are most able to suggest the differences in the required workload and situation awareness. The required workload and situation awareness aspects were chosen because of their significant importance as crew centered design criteria.

The AN/AQS-14, commonly referred to as the "Q14" is essentially a down/sidelooking sonar device. Fig(40) is an illustration of the approximate search path of a "Q14" conducting AMCM operations. Once deployed from the aft end of the aircraft the "Q14's" depth is subsequently controlled from a console by an enlisted aircrewman.

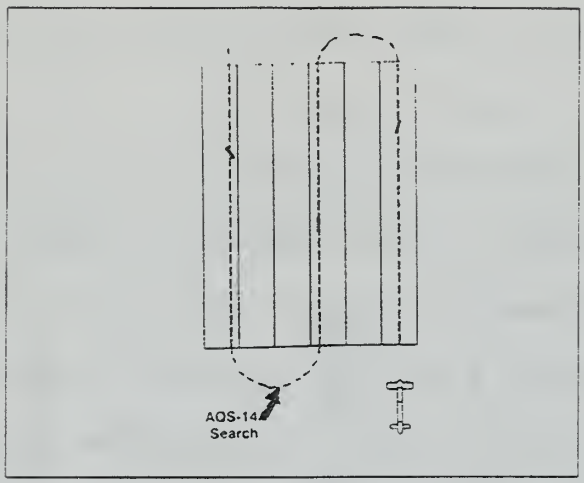

Figure 40 AN/AQS-14 Search Path

The subsystem can be used to locate both bottom and moored mines by the sonar reflections.

A. PILOT INFORMATIONAL REQUIREMENTS

For the towing environment during the ANS-Q14 mission, the primary information required by the pilot is as follows:

Required Pilot Information
Tension in (lbs)
Tension in a visual tape gauge format
Skew in (degrees)
Skew in a visual block reference gauge
Ground Speed in (kts)
Relative Ground Speed as a visual reference
Distance to the end of the field in "yds to go"

Table(5)Required Pilot Information

The following text serves to highlight the differences in the present cockpit displays vs. the NCS subsystem displays. The differences examined are those encountered by a pilot performing an AMCM mission. In order to compare the differences between the present cockpit displays vs. the NCS subsystem displays a uniform reference system was used. The uniform reference system assumes the distance to both the current cockpit display and the NCS system display are approximately equal for any particular pilot. The comparison makes references only to displacements in the plane of the cockpit instrument panel. The points about which the measurements were made were the respective centers of the two different primary attitude displays. Thus the reference point used for the NCS system is the center of the HSDS screen. Likewise, the reference point used for the present cockpit is the center of the ADI.

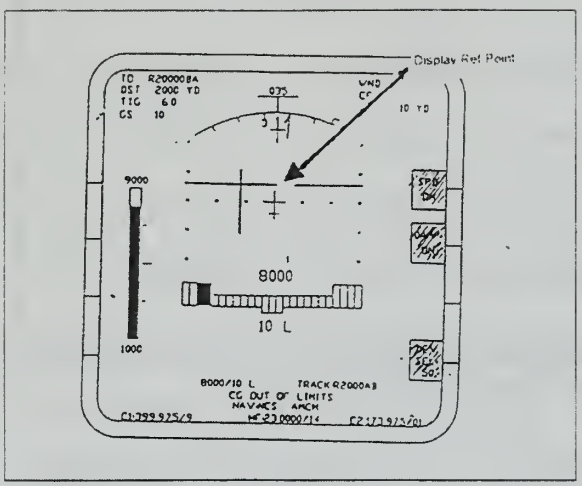

Figure 41 Reference Point

Both of these points correspond to the location where the cross track deviation bar and the visual speed reference bar cross as depicted in Fig (41).

Using the present system, the pilot must scan the following distances to acquire the necessary information listed in Table (6).

Information Required	Scan Distance (in)
Tension in (lbs)	5.25
Tension in tape gauge format	5.50
Skew in (degrees)	5.00
Skew as a visual block reference	5.25
Ground Speed in (kts)	3.75
Distance to the far end of the present minefield	> 30.0

Table(6) Information Required by Pilot

For the pilot using the NCS system the distances he must scan to get the same associated information are listed in Table(7).

Information Required	Scan Distance (in)
Tension in (lbs)	2.63
Tension in tape gauge format	1.13
Skew in (degrees)	2.13
Skew as a visual block reference	1.75
Ground Speed in (kts)	2.50
Distance to the far end of the present minefield	2.63

Table(7) Information Required by Pilot

B. CO- PILOT'S INFORMATION REQUIREMENTS

The information required by the co-pilot is quite different than that required by the pilot because of the greater variety of tasks performed by the co-pilot. The co-pilot's tasks include but are not limited to navigating, tuning avionics, performing checklists ,etc. In regards to the co-pilots information requirements a comparison of the NCS cockpit vs present cockpit was made. However, since the co-pilot's required information is in proximities other than instrument panel, a scan distance comparison was not made. For the co-pilot's information requirements the only comparison made involved instrument proximity. For a co-pilot in the present cockpit the instrument locations are listed in Table (8).

Information Required	Instrument Location
Aircrafts minefield position	VO- 30 (center console)
Distance to next minefield track	VO- 30 (center console)
Direction of turn	VO- 30 (center console)
Time to turn cue	VO- 30 (center console)

Table(8) Instrument Proximity

For a co-pilot in the NCS cockpit the instrument locations are listed in Table (9) .

Information Required	Instrument Location
Aircraft minefield position	HSDS Front Inst Panel
Distance to next minefield track	HSDS Front Inst Panel
Direction of turn	HSDS Front Inst Panel
Time to turn cue	HSDS Front Inst Panel

Table(9)Instrument Proximity

It should be noted that the flat position of the VO-30 screen often requires the co-pilot to bend over it to acquire the necessary information. The co-pilot positioning himself in this manner is often due to glare and the VO-30's small screen size.

Turning Comparison

The following comparison of the NCS system vs. the present cockpit is done to highlight how the differences in the cockpit configurations could effect mission effectiveness. The "*turn*" portion of the mission was selected for comparison because this portion of the mission is directly related to mission effectiveness.

The effectiveness of a AMCM mission can be measured by the ***Operational Tow Time*** . The Operational Tow time is a good measure of effectiveness because it measures the amount of time spent in the minefield performing tow operations. The Operational Tow Time commonly referred to as **OPTOW** can be thought of using the following mathematical relations:

T = TOTAL TOW TIME
ST = STREAM TIME
TU = TIME IN TURNS
AV = TIME IN AVOIDANCE TURNS

$$OPTOW = (T)-(ST)-(TU)-(AV).$$

Thus, effectiveness of Aircrew Centered System Design during this part of the mission is paramount because the effectiveness of the turn is substantially dependent on the crews situational awareness.

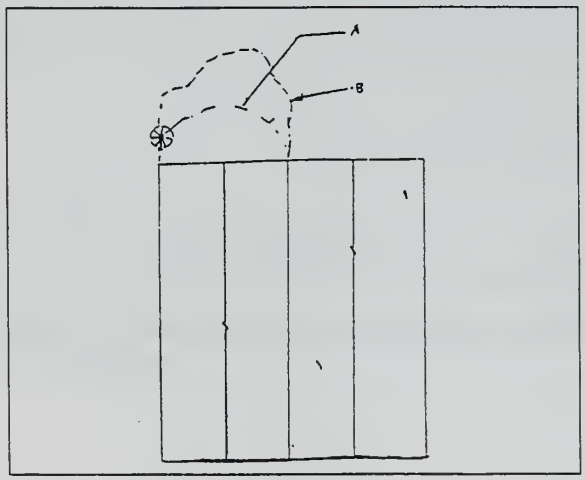

Figure 42 Turn Comparison

The significant differences in the cockpit displays are that in the new cockpit:

1) The co-pilot and pilot can see the complete minefield from an moving map perspective.

2) The pilot does not have to rely on the co-pilot to inform him/her of when to start turning.

As an illustration, Fig (42) depicts the differences between a pilot making an efficient turn,(A) vice an non-efficient turn,(B). It must be kept in mind that the towing speeds are very low during operations.

C. TURNING COMPARISON

In order to compare the cockpit displays during a turn it is first necessary to understand the type of information that is required of the pilots. For the pilot the required information is as follows.

Required Pilot Information
Tension in (lbs)
Tension in a visual tape gauge format
Skew in (degrees)
Skew in a visual block reference gauge
Ground Speed in (kts)
Distance to the end of the minefield
Time to Start turn Cue

Table (10) Required Pilot Information

For the pilot using the present cockpit the required information and associated scan distances are listed in Table (11). Similarly for the pilot using the NCS cockpit the required information and associated scan distances are listed in Table (12)

Required Pilot Information	Scan Distance (in)
Tension in (lbs)	5.25
Tension in a visual tape gauge format	5.50
Skew in (degrees)	5.00
Skew in a visual block reference gauge	5.25
Ground Speed in (kts)	3.75
Distance to the end of the minefield	Not Available
Time to Start turn Cue	Not Available

Table (11) Scan Distance

Required Pilot Information	Scan Distance (in)
Tension in (lbs)	2.63
Tension in a visual tape gauge format	1.13
Skew in (degrees)	2.13
Skew in a visual block reference gauge	1.75
Ground Speed in (kts)	2.63
Distance to the end of the minefield	2.63
Time to Start turn Cue	2.63

Table (12) Scan Distance

VIII. OPERATION EVALUATION (OPEVAL)

A. OPERATION EVALUATION BACKGROUND

The NCS system has undergone a thorough fleet evaluation otherwise know as an "OPEVAL." The OPEVAL was conducted in 3 March to 27 April of 1995 under the supervision of Air Test and Evaluation Squadron One (VX-1) of Patuxent River Maryland.

The scope of the OPEVAL was to take the NCS mission system currently loaded onto a fleet standard MH-53E helicopter and let fleet pilots fly and evaluate the system in their training environment. The fleet evaluation pilots selected were five MH-53E pilots in number with varying degrees of experience, stationed at Helmineron Fourteen (HM-14) located at NAS Norfolk , Virginia. Prior to the evaluation flights, the pilots received ground school instruction by the NCS system manufacturer, EER Systems Inc. After the ground school training, the pilots received familiarization flights with Squadron ONE's MH-53E NCS system evaluation pilot. Once familiar with the NCS system operation , the HM-14 pilots conducted seven AMCM training sorties after which the pilots completed an AMCM Mission Evaluation Narrative(NAVAIR,1995).

The AMCM Mission Narrative authored by (VX-1) contained nine questions in which the pilots were asked to describe system performance in the AMCM environment. An example of the AMCM narrative is contained in Figs (43) .

B. OPERATION EVALUATION RESULTS CLASSIFICATION

The author evaluated the data from the narratives in a concise manner, the data was separated into four categories: Orientation & Situational Awareness, Marking Procedures , Navigation & Steering, Weight and Balance Calculations. Since the nature of the narrative data was subjective and represented at best ***ordinal*** data only three levels of measurement was used to quantify the data. The author utilized three levels of measurement which were ***Favorable, Neutral and Unfavorable*** (Petho,1995).

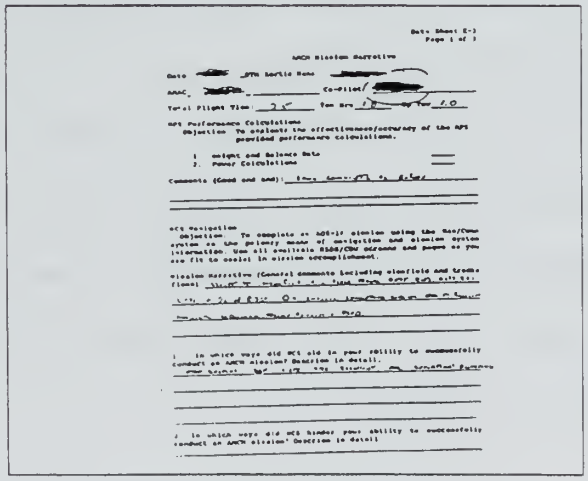

Figure 43 AMCM Narrative

C. RESULTS

The results of the AMCM narrative summaries are indicated in Fig (44). From the summary data it is very apparent that pilot opinions of the cockpit design changes were primarily favorable or unfavorable. The aspects of the design changes that yielded the most favorable results were the Orientation/Situation Awareness & Navigation /Steering. The most unfavorable aspect was the marking procedures. The marking procedures received unfavorable opinions because they required the co-pilot to input: time, skew angle , etc. into the GPS interface in order complete the marking procedures.

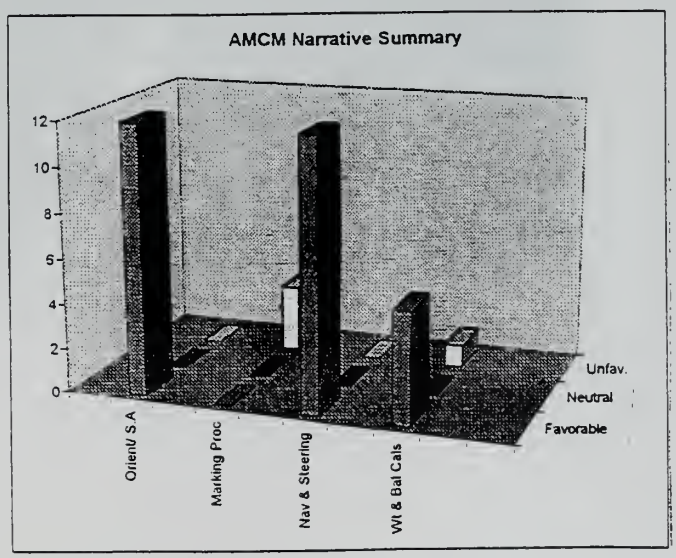

Figure 44 AMCM Narrative Results

IX. IMPACT OF AIRCREW REQUIREMENTS ON AIRCRAFT DESIGN

The subject matter explored in this part of the thesis involves some observations of possible design changes that could be undertaken in future AMCM aircraft.

A. ROTOR DOWNWASH REDUCTION

Rotor downwash is a phenomena of which AMCM aircrews must constantly be aware, because of it's negative effects on mission performance. Rotor downwash is the downward airflow produced by the rotating main rotor of a helicopter as depicted in Fig (45).

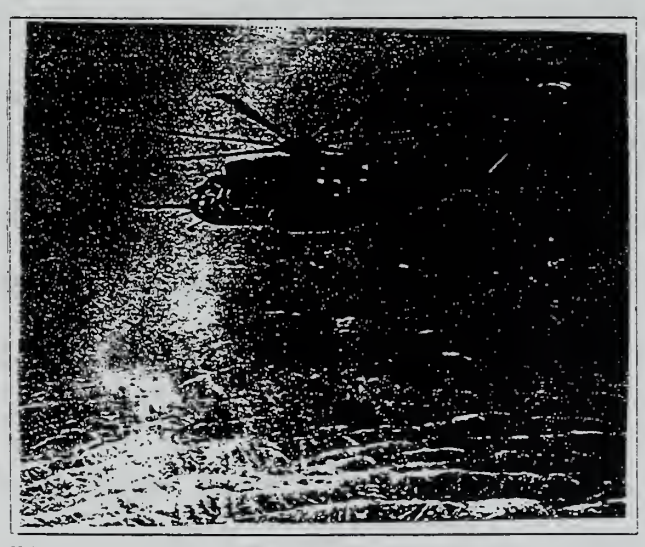

Figure 45 Rotor Downwash

Rotor downwash can have a negative impact on AMCM mission performance by causing water mist to obstruct the aircrew's vision during an over water hover or by oscillating the AMCM "towed body" during streaming/recovering operations. When vision obstruction problems become apparent this often forces the crew to hover at a higher altitude than if no misting had occurred. The problems of oscillating "towed bodies" are often rectified by the pilot adjusting the aircraft drift speed/direction. Rotor downwash is the primary reason the MH-53E helicopter must hover over water at approx 50+ ft vice 35+ ft accomplished by smaller aircraft like the SH-3, SH-60 , etc. This required hover altitude due to rotor downwash misting impacts the AMCM mission by sometimes increasing the amount of time required to stream/recover a "towed body".Lastly,one of the reasons MH-53E aircrews are not authorized to hoist individuals during an over water rescue is because of the vigorous rotor downwash induced waves to which a person would be subjected.

The phenomena of rotor downwash is primarily a function of the helicopter's Disk Loading (DL)(Prouty,1990). Mathematically, Disk Loading is equal to rotor thrust divided by the rotor disk area as suggested in equation (1).

$$DL = \text{Thrust/Rotor Disk Area} \quad (1)$$

For an helicopter in a hover, this thrust is equal to the Gross Weight (GW).The relationship between the air downflow velocity and the disk loading at sea level is expressed by equation (2).

$$v=\sqrt{(DL)/2\rho} \quad (2)$$

Based on equation (2), Fig (46) depicts the relationship between air downflow velocity and the helicopter's rotor radius for various aircraft gross weights. The design parameters by which the engineer can vary the aircraft's rotor downwash are primarily the aircraft's Gross Weight (GW), and rotor blade length (R). The aircrafts' weight is dependent upon its component weights while the rotor disk area is a function of the rotor radius.

Equation (1) can thus be rewritten in terms of these parameters as equation (3)(Prouty,1990).

$$GW=\pi R^2 DL \qquad (3)$$

Based on equation (3), Fig (47) depicts the relationship between air downflow velocity and the helicopter's rotor radius for various aircraft gross weights. Therefore, changes in a helicopter's gross weight or rotor blade length will have an effect on the helicopter's downwash velocity and possibly the aircrew operating the helicopter. Lowering an aircraft's disk loading may allow an aircrew to clearly see at altitudes lower than previously possible.

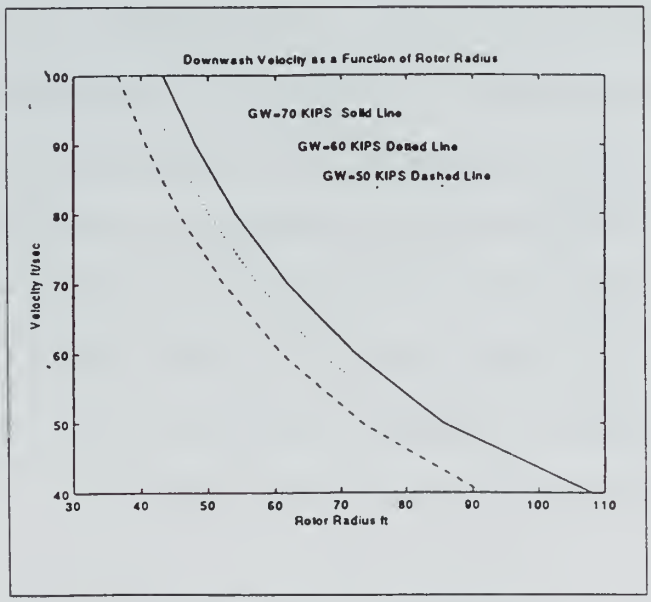

Figure 46 Downwash vs Rotor Radius

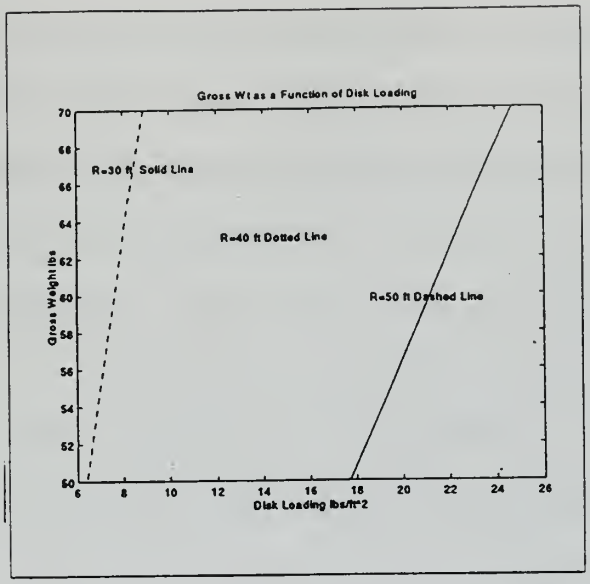

Figure 47 Gross Weight vs Disk Loading

B. COEFFICIENT OF DRAG REDUCTION

In an effort to explore the manner in which the space requirements of the aircrew are related to total aircraft drag, a brief study was conducted in which the aircraft fuselage size was related to the coefficient of drag. If the aircraft fuselage diameter is narrowed by 10% the aircraft total drag could be reduced by a minimum 2.5%.

This reduction in drag has a potential to significantly affect the mission by decreasing the required thrust. The workspace of the aircrew is best illustrated by a photograph as illustrated in Fig (48)which is taken inside the MH-53E aircraft fuselage looking aft.

As depicted during an AMCM mission, the aircrewmen workspace is very limited. During an AMCM mission the aft end of the MH-53E contains winches, consoles and the "towed body". One requirement that cannot be compromised is the requirement that the aircrew must have sufficient workspace within the aircraft in which to escape, in the event of an aircraft ditching. Thus, a reduction in drag as a result of a narrower fuselage would impact the aircrew by making for a more confined cabin.

A smaller cabin area would necessitate a requirement for smaller winches in order to accommodate the crew ditching requirements. The potential use of smaller winches could only happen if the "towed bodies" are re-designed to require less tension.

Figure 48 Aircrew Workspace

Thus, from this aspect the needs of the crew could have an indirect impact on the decision to make the aircraft fuselage smaller or in the re-design of the "towed body."

X. CONCLUSION

It is suggested that the proposed changes in the MH-53E instrument panel should reduce the pilot load stress (Petho,1992) by

1) Reducing the number of instruments the pilot must scan to perform the AMCM mission.

2) Reducing the distance the pilot must scan to perform the AMCM mission.

It is suggested that Situation Awareness and Navigation/Steering aspects of the new cockpit were the most favorable results because it provided the pilots with a top view of where the aircraft was with respect to the inside and perimeter of the minefield. It is also suggested that the positioning and screen size of the VO-30 in the present cockpit may pose a hindrance to the pilot attempting to acquire necessary information.

Contrarily, the HSDS TOW screen may significantly improve the ability of the pilots to acquire information by

1) Positioning the screen on the primary instrument panel where it's proximity for glare is reduced. The positioning of the screen additionally enables the pilot to obtain the moving map thereby enabling him to judge his rate of turn.

2) The HSDS TOW screen provides an complete overview of the mine field on a much larger screen than does the VO-30 .The larger screen size of 6 X 6 inches enables the information to be scanned much more easily than on the 4 X 5 inch VO-30 screen .

3) The automatic turn indicator provides takes the guesswork out when the pilot should start the AMCM turn.

The procedures used in the marking of a mine-like contact proved to be the only source of unfavorable comments. Three out of the fourteen narratives state that the marking of a "mine-like" contact was too laborious because it prompted the pilot to input the location of the "mine-like" object. This noting of the "mine like" object is not required because the aircrewman performing the *Recorder* tasks are required to record this information as per NATOPS procedures. Thus, the negative comments concerning the "marking" procedures should not significantly impact the NCS system performance.

XI. RECOMMENDATIONS

It is recommended that more detailed explorations be made as to how aircrew design requirements impact weight and or drag of helicopters. Secondly, it is recommended that a study be conducted to see if the new NCS system has positive impact on operational tow time.

APPENDIX

AMCM Mission Narrative

Date: 17APR DTM Sortie Name: 17APRQ1401

AHAC [redacted] Co-Pilot [redacted]

Total ~~Flight~~ Time: 1.8 Tow Hrs_____ Op Tow_____

MPS Performance Calculations
Objective: To evaluate the effectiveness/accuracy of the MPS provided performance calculations.

1. Weight and Balance Data
2. Power Calculations

Comments (Good and Bad): No Problems

NCS Navigation
Objective: To complete an AQS-14 mission using the Nav/Comm system as the primary means of navigation and mission system information. Use all available HSDS/CDU screens and pages as you see fit to assist in mission accomplishment.

Mission Narrative (General comments including minefield and tracks flown): Departed X-RAY FLEW NCS to stream point. Utilized MPS stream point. Completed several tracks. Mission abort due to Q-14 Probs. RTB via flt plan route.

1. In which ways did NCS aid in your ability to successfully conduct an AMCM mission? Describe in detail.
Vastly increased situational awareness. Following the stream point, we manually sequenced to first track For some reason, we lost the PSEO (it sequenced to last track) Tow screen still allowed me to navigate

2. In which ways did NCS hinder your ability to successfully conduct an AMCM mission? Describe in detail.
Problem with towed body position ?

3. Did the NCS provide adequate steering cues and the ability to navigate precisely in the minefield?
YES NO If no, why? yes, looking over a copilots TAD screen makes orientation easy.

4. Which NCS functions, if any, were particularly difficult, time consuming, or required too much focus in the cockpit?

Mark, - initially takes a lot of time to input all the variables

5. Were there any failures ~~or~~ difficulties with the NCS encountered during the flight? YES NO Describe:
After manually sequencing once, NCS sequenced to last track of minefield.

6. Did you see any abnormal CWA's?

No

7. Was critical mission information readily available?

Yes

8. Did you deviate from your MPS created flight plan? If yes, why and how?
We flew our route exactly as flight planned

9. Do you foresee any AMCM tactical changes as a result of NCS integration?

_____

_____

_____

AMCM Mission Narrative

Date: 26APR DTM Sortie Name: 26APR Q14 08

AHAC [redacted] Co-Pilot [redacted]

Total Flight Time: 2.8 Tow Hrs 1.8 Op Tow 1.5 ?

MPS Performance Calculations
Objective: To evaluate the effectiveness/accuracy of the MPS provided performance calculations.

1. Weight and Balance Data ✓
2. Power Calculations ✓

Comments (Good and Bad):

Good

NCS Navigation
Objective: To complete an AQS-14 mission using the Nav/Comm system as the primary means of navigation and mission system information. Use all available HSDS/CDU screens and pages as you see fit to assist in mission accomplishment.

Mission Narrative (General comments including minefield and tracks flown): Another great flight w/ the NCS a/c. Standard minefield stream, approx 8 tracks complete. Winds were heavier negating use of skewhold. 1st time AHAC manually controlled skew w/ NCS system. Skew indicator works well, better than current TSI

Note: more with scan pattern color coding

1. In which ways did NCS aid in your ability to successfully conduct an AMCM mission? Describe in detail.
Skew indicator is superior to current TSI unit. Display is bigger/more visible and right there in front of you. The colored sections - yellow at 8°, red at 12° - is actually quite useful. If for example, situational awareness lapses - that thing turning yellow is easily seen from the peripheral

2. In which ways did NCS hinder your ability to successfully conduct an AMCM mission? Describe in detail.
Not necessarily a hindrance and before this flight not even thought of. I realized on this flight that w/ the AHAC in the left seat & co-pilot in the right seat, and w/ the copilot towing (ie: up on the MCM page) and the AHAC on the TOW page, that the AHAC has no reference to skew, other than the digital numbers on the bottom of the page (ie: 8L, 3R, etc), or looking

cross cockpit, or switching to the MCM page himself. While this poses no problem in the operational environment (using skewhold mostly, and experienced pilots who know how to tow), this could be a problem in the fleet when flying with a junior co-pilot without much experience. The problem arises

3. Did the NCS provide adequate steering cues and the ability to navigate precisely in the minefield? (CVBN)

YES NO If no, why?

4. Which NCS functions, if any, were particularly difficult, time consuming, or required too much focus in the cockpit?

Marking contacts requires too much button mashing up front. Some kind of data link between the a/c's skew/heading/console operator would really be a benefit in accurate target relocation. There is too much room for operator error in recording minelike contacts, either pilot or w/ the console operator in his written recording. To make this system cherry all the pilot should have to do is hit one (1) button up front - ie: Mark button.

5. Were there any failures or difficulties with the NCS encountered during the flight? YES NO Describe:

See #4 above.

6. Did you see any abnormal CWA's?

No

7. Was critical mission information readily available?

Yes

8. Did you deviate from your MPS created flight plan? If yes, why and how?

Had to sequence out of last track due to time constraints

losses?

where you have the co-pilot towing and he "loses the bubble" and skew gets way out, requiring the AHAC to take controls and rectify the situation. In the current configuration the AHAC and co-pilot both have TSI's, allowing the AHAC to monitor/scan the co-pilot's skew. With the NCS configuration the AHAC sitting in the Left seat would have to: A) convert a digital output, like "10L" into an "analog" interpretation ~~and~~ (ie: "My skew is way out to the left, I need right pedal."; B) look cross cockpit to get the proper picture and then make the correct adjustment; C) switch his HSDS from TOW to MCM; or D) use an aircrewmen call from the back to make a determination and then correction. All of the above require way too much time and/or "brains" from the AHAC. Correcting skew in such a scenario is an instinctive reaction w/o any "interpretation" time. There are different methods used by different pilots. I use the "step on the zero" method - ie: w/ the current TSI there is a "0" indicated at the center of skew. If the skew is way out to the left the "0" is to the right of that and "stepping on the zero" (ie: right pedal) is the correct input required. This might sound like it requires some thought, but in practice it is a very quick and instinctive reaction. With any of A through D above, the time required would result in aircraft damage and/or personnel injury.

Possible solutions might be to: A) have the AHAC occasionally switch screens to monitor skew (or look cross cockpit). This is not a satisfactory answer though, because the now flying pilot needs to be up on the TOW page to accurately cow the pilot in a turn to make a good turn. Out of the field and making a turn is also the most likely place for a pilot to get into trouble w/ skew.

B) MODIFY THE HSDS TOW page to have a skew indicator. Probably the most expensive/least feasible option, but the one I would like to see.

C) Make a procedural/technique modification, where the (on back of next page

AHAC analyzes who he is flying with. If it is someone he trusts not to put him in a bad situation (ie: a good tower), then ~~to~~ seating arrangements don't matter. If the copilot is someone junior w/ little experience, make him sit in the left seat and have the AHAC sit in the right seat where he can adequately monitor / backup the co-pilots scan by scanning the redundant TSI on the right side.

Probably option C is the way to go, but this is an issue that needs to be addressed.

9. Do you foresee any AMCM tactical changes as a result of NCS integration?

Possibly having AITAC sit right seat w/ junior co-pilots as mentioned before.

AMCM Mission Narrative

Date: 26APR DTM Sortie Name: 26APR0140Z

AHAC [redacted] Co-Pilot [redacted]

Total Flight Time: 2.5 Tow Hrs 1.8 Op Tow 1.0

MPS Performance Calculations
Objective: To evaluate the effectiveness/accuracy of the MPS provided performance calculations.

1. Weight and Balance Data ____
2. Power Calculations ____

Comments (Good and Bad): ____

NCS Navigation
Objective: To complete an AQS-14 mission using the Nav/Comm system as the primary means of navigation and mission system information. Use all available HSDS/CDU screens and pages as you see fit to assist in mission accomplishment.

Mission Narrative (General comments including minefield and tracks flown): FLAWLESS AQS-14 TILL WE HIT SOMETHING. COMPLETED R575, R151, R697, R211, L575 R333 PARTIALLY

1. In which ways did NCS aid in your ability to successfully conduct an AMCM mission? Describe in detail.

ORIENTATION WAS OUTSTANDING

2. In which ways did NCS hinder your ability to successfully conduct an AMCM mission? Describe in detail.

MARK PROCEDURE IS TOO LABORIOUS IF YOU INCLUDE TARGET/SCREEN PERCENTAGES.

3. Did the NCS provide adequate steering cues and the ability to navigate precisely in the minefield?
YES NO If no, why?

YES. FLAWLESS

4. Which NCS functions, if any, were particularly difficult, time consuming, or required too much focus in the cockpit?

TARGET LOCATION DATA TO PUT INTO MARK PAGE REAL TIME. TOO MUCH GUESS WORK

5. Were there any failures or difficulties with the NCS encountered during the flight? YES NO Describe:

6. Did you see any abnormal CWA's?

NONE

7. Was critical mission information readily available?

YES

8. Did you deviate from your MPS created flight plan? If yes, why and how?

HAD TO SWITCH DTMS DUE TO PRIOR MISSION COMPLETION DATA

9. Do you foresee any AMCM tactical changes as a result of NCS integration?

NO. IF YOU DISCOUNT TRACK AND SECTOR DATA AND NOMENCLATURE.

AMCM Mission Narrative

Date 29 Mar 95 DTM Sortie Name: 29 MAR 95 II

AHAC [redacted] Co-Pilot LT [redacted]

Total Flight Time: 3.0 Tow Hrs 1.8 Op Tow 1.2

MPS Performance Calculations
Objective: To evaluate the effectiveness/accuracy of the MPS provided performance calculations.

1. Weight and Balance Data
2. Power Calculations 4.0

Comments (Good and Bad): HOGE Dual Engine Wgt ~~differed~~ differed from hand calculated value by 2K# (was 2K less than manually calculated). PWR REQ'D/AVAILABLE were identical to manually calculated. Don't understand discrepancy.

NCS Navigation
Objective: To complete an AQS-14 mission using the Nav/Comm system as the primary means of navigation and mission system information. Use all available HSDS/CDU screens and pages as you see fit to assist in mission accomplishment.

Mission Narrative (General comments including minefield and tracks flown): Flew dragon pad, X-Ray, to stream point w/ completion of 4 of 5 tracks in PSEC, followed by same route back (did SW entry). Situational awareness on stream thru recovery (and accuracy) were superior. Excellent SA!

1. In which ways did NCS aid in your ability to successfully conduct an AMCM mission? Describe in detail.
Forte is out of the field maneuvering for next track. Excellent SA in & out of field. Seriously increases OPTOW due to reduction of out of the field maneuvering

2. In which ways did NCS hinder your ability to successfully conduct an AMCM mission? Describe in detail.
Doppler placement took some getting used to. Cross cockpit "looking" not as feasible as I thought it would be. Not a negative thing, just means that the copilot still plays large role in positioning for next track. His job is much

3. Did the NCS provide adequate steering cues and the ability to navigate precisely in the minefield?
YES NO If no, why?

4. Which NCS functions, if any, were particularly difficult, time consuming, or required too much focus in the cockpit?

None of note. Just important to continue to emphasize not to have both pilots engaged inside the cockpit simultaneously.

5. Were there any failures or difficulties with the NCS encountered during the flight? YES NO Describe:

Difficulty (probably operator error) when switching from Auto Sequence to manual sequence & then back to Auto. For some reason, could not get Auto Sequence to "re-engage" on transit back to Base.

6. Did you see any abnormal CWA's?

Pilot ADI MCP

7. Was critical mission information readily available?

Yes -

8. Did you deviate from your MPS created flight plan? If yes, why and how?

Yes - did not stick rigidly to Stream point - sequenced out of 5th track - came in Sw entry vice X Ray.

9. Do you foresee any AMCM tactical changes as a result of NCS integration?

NCS will greatly increase OPTOW - Saving Fuel, time on station, & increasing mission "Efficiency".
A great system. Very Nice.

Possible Nice to see improvements - a scale increment between 4 & 16 & a "32" scale. The utilization of the existing cyclic button "blank" to allow the flying pilot to either scale up & down or to switch between the MCM & tow pages without having to remove hands from cyclic (or to scan cross cockpit) would be a very nice feature. Don't know if it would be a too substantial modification or not.

AMCM Mission Narrative

Date: 26APR DTM Sortie Name: 26APRQ14 06

AHAC [redacted] Co-Pilot [redacted]

Total Flight Time: 2.8 Tow Hrs 1.8 Op Tow 14

MPS Performance Calculations
Objective: To evaluate the effectiveness/accuracy of the MPS provided performance calculations.

1. Weight and Balance Data ✓
2. Power Calculations ✓

Comments (Good and Bad): Accurate.

NCS Navigation
Objective: To complete an AQS-14 mission using the Nav/Comm system as the primary means of navigation and mission system information. Use all available HSDS/CDU screens and pages as you see fit to assist in mission accomplishment.

Mission Narrative (General comments including minefield and tracks flown): Flew 7.5 tracks w/ multiple contacts. minefield off Cape Henry Azimuth 250/100.

1. In which ways did NCS aid in your ability to successfully conduct an AMCM mission? Describe in detail.
Reduced wasted turn/non-optow time. Situational Awareness Greatly enhanced. Skew Indicator right in front of you (easy to use peripheally (sp?)). - Skew hold kicked off several times, but because of the position of the skew indicator & the yellow light - it was caught

2. In which ways did NCS hinder your ability to successfully conduct an AMCM mission? Describe in detail.
Initially sequenced past 1st two tracks. Easily corrected though.

before crewman mentioned it.

3. Did the NCS provide adequate steering cues and the ability to navigate precisely in the minefield?
YES NO If no, why? Extremely Accurate. Still have to write down too much on mark contact though - Skew / Heading etc. Nice if link made to DTM for this info.

4. Which NCS functions, if any, were particularly difficult, time consuming, or required too much focus in the cockpit?

None.

5. Were there any failures or difficulties with the NCS encountered during the flight? YES NO Describe:
Sequenced past 1st 2 tracks, probably because, prior to stream, we got very close to the field & turned around. This may have caused the sequencing.

6. Did you see any abnormal CWA's? No

7. Was critical mission information readily available?
Yes - System still requires high degree of crew coordination between pilot & co-pilot to take advantage of capabilities - ie: turns on to the field are still coordinated by non-flying pilot - Here turns w/ a good co-pilot are very much more efficient.

8. Did you deviate from your MPS created flight plan? If yes, why and how?
Sequenced to different track for first track due to early mentioned sequencing.

9. Do you foresee any AMCM tactical changes as a result of NCS integration?

System provides for better mission efficiency based on increased loiter time brought on by better situational awareness out of the field, effectively reducing time "wasted" out of the field. Result is less fuel used / greater time on station.

Overall - System is quantum leap improvement over current system. It would be nice to have the ability via cyclic button, to switch from TOW screen to MCM screen w/o removing hands from controls. Currently system is highly accurate with a good co-pilot, but pilot still relies heavily on co-pilot for a good efficient turn. It would be a very nice improvement to give the pilot the ability to monitor his own turn w/ the press of a cyclic button.

Excellent flight —

[redacted]

AMCM Mission Narrative

Date: 29MAR95 DTM Sortie Name: 29MAR95

AHAC [redacted] Co-Pilot [redacted]

Total Flight Time: 3.0 Tow Hrs 1.8 Op Tow 1.2

MPS Performance Calculations
Objective: To evaluate the effectiveness/accuracy of the MPS provided performance calculations.

1. Weight and Balance Data _____
2. Power Calculations _____

Comments (Good and Bad): EXCELLENT FLIGHT

NCS Navigation
Objective: To complete an AQS-14 mission using the Nav/Comm system as the primary means of navigation and mission system information. Use all available HSDS/CDU screens and pages as you see fit to assist in mission accomplishment.

Mission Narrative (General comments including minefield and tracks flown): EXCELLENT MINEFIELD ORIENTATION AND HORIZONTAL SITUATIONAL AWARENESS. EASIER TO USE AS EXPOSURE INCREASES, NEVER AT A LOSS DURING NAVIGATING THROUGH AND AROUND THE MINEFIELD

1. In which ways did NCS aid in your ability to successfully conduct an AMCM mission? Describe in detail.

MCM/TOW SCREENS MUCH EASIER TO OBSERVE AND ASSIMILATE DATA HAVE TO RELY ON COPILOT FOR STEERAGE. TOO DIFFICULT TO LOOK OVER TO COPILOTS HSDS WHEN UNDER TOW.

2. In which ways did NCS hinder your ability to successfully conduct an AMCM mission? Describe in detail.
STREAM POINT THAT MPS PICKS IS TOO RESTRICTIVE

3. Did the NCS provide adequate steering cues and ~~the~~ ability to navigate precisely in the minefield?
YES NO If no, why?

4. Which NCS functions, if any, were particularly difficult, time consuming, or required too much focus in the cockpit?

ENROUTE SEGMENT TO STREAM POINT

5. Were there any failures or ~~dif~~ficulties with the NCS encountered during the flight? YES NO Describe:

6. Did you see any abnormal CWA's?

7. Was critical mission information readily available?

YES

8. Did you deviate from your MPS created flight plan? If yes, why and how?
YES. DIDN'T FINISH LAST TRACK DUE TO TIME-NO FUEL. DELETED LAST TRACK AND MANUAL SEQ TO NEXT WAYPOINT. AFTER THAT SYSTEM WOULDN'T AUTO SEQ. THROUGH REST OF FLIGHT PLAN

9. Do you foresee any AMCM tactical changes as a result of NCS integration?

WOULD BE NICE TO HAVE JUMP SEAT OBSERVER ALL THE TIME

AMCM Mission Narrative

Date: 24APR95 DTM Sortie Name: _____

AHAC [redacted] Co-Pilot [redacted]

Total Flight Time: 1.5 Tow Hrs 1.3 Op Tow .5

MPS Performance Calculations
Objective: To evaluate the effectiveness/accuracy of the MPS provided performance calculations.

1. Weight and Balance Data ✓
2. Power Calculations ✓

Comments (Good and Bad): No Problems

NCS Navigation
Objective: To complete an AQS-14 mission using the Nav/Comm system as the primary means of navigation and mission system information. Use all available HSDS/CDU screens and pages as you see fit to assist in mission accomplishment.

Mission Narrative (General comments including minefield and tracks flown): Departed X-RAY. FLEW MPS route to W-50B Slight deviation from stream point. Manually sequenced into field. Completed 2 tracks. Recovered due to Wx. Flew back using MPS route. Had to deviate due to WX.

1. In which ways did NCS aid in your ability to successfully conduct an AMCM mission? Describe in detail.

Great Help! Marginal Wx about 600-1 at times NCS provided outstanding situational awareness.

2. In which ways did NCS hinder your ability to successfully conduct an AMCM mission? Describe in detail.
It did not hinder at all.

3. Did the NCS provide adequate steering cues and the ability to navigate precisely in the minefield?
YES NO If no, why? YES, Sequencing to get extended centerline of first track is very helpful.

4. Which NCS functions, if any, were particularly difficult, time consuming, or required too much focus in the cockpit?
Did not happen on our flight — Changing PSEQ is time consuming.

5. Were there any failures or difficulties with the NCS encountered during the flight? YES NO Describe: Determined Tow Body position will come on with tow boom out of Stow.

6. Did you see any abnormal CWA's?
None

7. Was critical mission information readily available?
yes, as usual.

8. Did you deviate from your MPS created flight plan? If yes, why and how?
Forced to deviate during return leg to Chambers due to SVFR arrivals. NAV screen was extremely helpful in that I was still oriented with X-RAY even though the Vis. was too bad to have a visual on it.

AMCM Mission Narrative

Date: 29 MAR 95 DTM Sortie Name: 29MAR95X

AHAC LT [redacted] Co-Pilot LT [redacted]

Total Flight Time: 2.5 Tow Hrs 1.6 Op Tow .9

MPS Performance Calculations
Objective: To evaluate the effectiveness/accuracy of the MPS provided performance calculations.

1. Weight and Balance Data ____
2. Power Calculations ____

Comments (Good and Bad): DID NOT USE

NCS Navigation
Objective: To complete an AQS-14 mission using the Nav/Comm system as the primary means of navigation and mission system information. Use all available HSDS/CDU screens and pages as you see fit to assist in mission accomplishment.

Mission Narrative (General comments including minefield and tracks flown): Departed point X-RAY, did MISSION waypoints out to field. Used the stream point set up by MPS. Completed 3 1/2 tracks. Recovered. Used mission waypoints to Oceana → to NGU.

1. In which ways did NCS aid in your ability to successfully conduct an AMCM mission? Describe in detail.
NCS greatly enhanced mission situational awareness. Having copilot up tow screen allows him to help pilot make better turns and use precise stream points. INCREASES OP TOW time. Able to plan & fly a very structured mission each time.

2. In which ways did NCS hinder your ability to successfully conduct an AMCM mission? Describe in detail.
NCS does not really hinder ability to successfully

complete a mission.

3. Did the NCS provide adequate steering cues and the ability to navigate precisely in the minefield?
YES NO If no, why? YES, HSDS readout for heading makes you very aware of field azimuth and any slight heading deviations are obvious. On next flight, would like to look at tow boom response and how HSDS compares. I know this was done in DT.

4. Which NCS functions, if any, were particularly difficult, time consuming, or required too much focus in the cockpit?
None were particularly difficult. From a personal standpoint, lack of exp. with NCS in tow environment caused me to stay inside cockpit more than usual while in the field. This resulted in over-correct. Need to stress this in the brief.

5. Were there any failures or difficulties with the NCS encountered during the flight? YES (NO) Describe:
NO, NCS worked exactly as planned.

6. Did you see any abnormal CWA's?
NO, Minor problem passing Test o CAL on AMCM Tow Panel. PROBLEM determined to be with tow boom load cell. Maybe need to ensure NCS has no effect on AMCM Tow Panel.

7. Was critical mission information readily available?
Yes. The information available with the current system is great. A nice-to-have would be altitude readout on the MCM/TOW screen.

8. Did you deviate from your MPS created flight plan? If yes, why and how?
We flew our flight plan exactly as created on the MPS.

9. Do you foresee any AMCM tactical changes as a result of NCS integration?

_____

_____

_____

AMCM Mission Narrative

Date: 26APR DTM Sortie Name: 26APRQN407

AHAC [redacted] Co-Pilot [redacted]

Total Flight Time: 2.5 Tow Hrs 1.8 Op Tow 1.0

MPS Performance Calculations
Objective: To evaluate the effectiveness/accuracy of the MPS provided performance calculations.

1. Weight and Balance Data _____
2. Power Calculations _____

Comments (Good and Bad): SAME COMMENTS AS BEFORE

NCS Navigation
Objective: To complete an AQS-14 mission using the Nav/Comm system as the primary means of navigation and mission system information. Use all available HSDS/CDU screens and pages as you see fit to assist in mission accomplishment.

Mission Narrative (General comments including minefield and tracks flown): WENT TO MINEFIELD AND FLEW TRACKS R575, R157, R697, R21 L575 + 1/2 of R333. Q14 SMACKED SOMETHING AND WE HAD TO RECOVER MANUALLY SEQUENCED THROUGH REMAINING PSEQ.

1. In which ways did NCS aid in your ability to successfully conduct an AMCM mission? Describe in detail.
MAP DISPLAY, DSF + XTK ARE EXCELLENT FOR SITUATIONAL AWARENESS

2. In which ways did NCS hinder your ability to successfully conduct an AMCM mission? Describe in detail.

3. Did the NCS provide adequate steering cues and the ability to navigate precisely in the minefield?
YES NO If no, why?

4. Which NCS functions, if any, were particularly difficult, time consuming, or required too much focus in the cockpit?
MAPL SUBTRACT IS A VERY BUSY PAGE AND TIME CONSUMING

5. Were there any failures or difficulties with the NCS encountered during the flight? YES NO Describe:

6. Did you see any abnormal CWA's?
NO

7. Was critical mission information readily available?
TIME + FOM IS NOT READILY AVAILABLE ESPECIALLY DURING MPL SUBTRACT

8. Did you deviate from your MPS created flight plan? If yes, why and how?
NO

9. Do you foresee any AMCM tactical changes as a result of NCS integration?

SECTOR NOMENCLATURE & TYPE OF SECTOR (NAMES)

AMCM Mission Narrative

Date: 17APR DTM Sortie Name: 17APRQ1401

AHAC [redacted] Co-Pilot [redacted]

Total ~~Flight~~ Time: 1.8 Tow Hrs _____ Op Tow _____

MPS Performance Calculations

Objective: To evaluate the effectiveness/accuracy of the MPS provided performance calculations.

1. Weight and Balance Data
2. Power Calculations

Comments (Good and Bad): No Problems

NCS Navigation

Objective: To complete an AQS-14 mission using the Nav/Comm system as the primary means of navigation and mission system information. Use all available HSDS/CDU screens and pages as you see fit to assist in mission accomplishment.

Mission Narrative (General comments including minefield and tracks flown): Departed X-RAY FLEW NCS to stream point, Utilized MPS stream point. Completed several tracks. Mission abort due to Q-14 Probs. RTB via flt plan route.

1. In which ways did NCS aid in your ability to successfully conduct an AMCM mission? Describe in detail.
Vastly increased situational awareness. Following the stream point, we manually sequenced to first track For some reason, we lost the PSEQ (it sequenced to last track) Tow screen still allowed me to navigate

2. In which ways did NCS hinder your ability to successfully conduct an AMCM mission? Describe in detail.
Problem with towed body position ?

3. Did the NCS provide adequate steering cues and the ability to navigate precisely in the minefield?
YES NO If no, why? yes, looking over a copilots TAD screen makes orientation easy.

4. Which NCS functions, if any, were particularly difficult, time consuming, or required too much focus in the cockpit?

Mark, - initially takes a lot of time to input all the variables

5. Were there any failures ~~or~~ difficulties with the NCS encountered during the flight? YES NO Describe:
After manually sequencing once, NCS sequenced to last track of minefield.

6. Did you see any abnormal CWA's?

No

7. Was critical mission information readily available?

Yes

8. Did you deviate from your MPS created flight plan? If yes, why and how?
We flew our route exactly as flight planned

9. Do you foresee any AMCM tactical changes as a result of NCS integration?

_____

_____

_____

AMCM Mission Narrative

Date: 8 APR 95 ~~DTM~~ Sortie Name: 18APRQ14C7

AHAC [redacted] Co-Pilot [redacted]

Total Flight Time: 2.8 Tow Hrs 2.1 Op Tow 1.5

MPS Performance Calculations
Objective: To evaluate the effectiveness/accuracy of the MPS provided performance calculations.

1. Weight and Balance Data ✓
2. Power Calculations ✓

Comments (Good and Bad): No Problems. Within 1% of Calculated Value

NCS Navigation
Objective: To complete an AQS-14 mission using the Nav/Comm system as the primary means of navigation and mission system information. Use all available HSDS/CDU screens and pages as you see fit to assist in mission accomplishment.

Mission Narrative (General comments including minefield and tracks flown): Flew our NCS flight plan to W50. Streamed using MPS stream point. Completed 9 tracks. RTB using NCS flight plan.

1. In which ways did NCS aid in your ability to successfully conduct an AMCM mission? Describe in detail.

Increased situational awareness allowed crew to pick an optimum stream point. Orientation in turns make for faster turns.

2. In which ways did NCS hinder your ability to successfully conduct an AMCM mission? Describe in detail.

No hindrance at all.

3. Did the NCS provide adequate steering cues and the ability to navigate precisely in the minefield?
YES NO If no, why? YES

4. Which NCS functions, if any, were particularly difficult, time consuming, or required too much focus in the cockpit?

Once you sequence out of minefield, it is difficult to get back into field.

5. Were there any failures or difficulties with the NCS encountered during the flight? YES NO Describe:

Difficulty getting towed body position to work After recycling towed body on/off several times it worked.

6. Did you see any abnormal CWA's?
No

7. Was critical mission information readily available?

Yes, (1.) In brief, must remind pilot to change screens when transferring controls (2.) dist from works excellent when making turns.

8. Did you deviate from your MPS created flight plan? If yes, why and how?
No, flew our flight exactly as planned.

9. Do you foresee any AMCM tactical changes as a result of NCS integration?

_____

_____

_____

AMCM Mission Narrative

Date: 18APR95 DTM Sortie Name: 18APRQ1407

AHAC [redacted] Co-Pilot [redacted]

Total Flight Time: 2.8 Tow Hrs _____ Op Tow _____

MPS Performance Calculations
Objective: To evaluate the effectiveness/accuracy of the MPS provided performance calculations.

1. Weight and Balance Data ____
2. Power Calculations ____

Comments (Good and Bad): Wt + Balance calcs were pretty much right on.

NCS Navigation
Objective: To complete an AQS-14 mission using the Nav/Comm system as the primary means of navigation and mission system information. Use all available HSDS/CDU screens and pages as you see fit to assist in mission accomplishment.

Mission Narrative (General comments including minefield and tracks flown): Completed several tracks and collected 9 mark points. Mission was very successful for NCS, pilots and aircrew.

1. In which ways did NCS aid in your ability to successfully conduct an AMCM mission? Describe in detail.
Minefield Orientation and situational Awareness are increased over current techniques immensely. Easy to determine relative position to the field during turns Easier to determine location in minefield at any time.

2. In which ways did NCS hinder your ability to successfully conduct an AMCM mission? Describe in detail.
It did not hinder in any way.

3. Did the NCS provide adequate steering cues and the ability to navigate precisely in the minefield?
YES NO If no, why? Navigation through the minefield has become easy. One Pilot on the MCM screen and the other on the tow screen allows for complete situational picture

4. Which NCS functions, if any, were particularly difficult, time consuming, or required too much focus in the cockpit?

None

5. Were there any failures or difficulties with the NCS encountered during the flight? YES NO Describe:

None

6. Did you see any abnormal CWA's?

Nothing abnormal

7. Was critical mission information readily available?

All info was available

8. Did you deviate from your MPS created flight plan? If yes, why and how?
No we stayed pretty close to the flight plan, (stream pt, tracks, and route waypoints.)

9. Do you foresee any AMCM tactical changes as a result of NCS integration?

A lot less time lost in turns and stream to the field time. Also flight records will show all A/C info at any time.

AMCM Mission Narrative

Date: 17APR95 DTM Sortie Name: _____

AHAC [redacted] Co-Pilot [redacted]

Total Flight Time: 1.8 Tow Hrs 1.0 Op Tow .3

MPS Performance Calculations

Objective: To evaluate the effectiveness/accuracy of the MPS provided performance calculations.

1. Weight and Balance Data ✓
2. Power Calculations ✓

Comments (Good and Bad): SAME COMMENTS AS BEFORE ABOUT SINGLE ENGINE, AND ABOUT THE WAY PERFORMANCE CALCULATIONS ARE DONE

NCS Navigation

Objective: To complete an AQS-14 mission using the Nav/Comm system as the primary means of navigation and mission system information. Use all available HSDS/CDU screens and pages as you see fit to assist in mission accomplishment.

Mission Narrative (General comments including minefield and tracks flown): NO PROBLEMS TO GET TO STREAM PT. MANUALLY SEQ ONCE PAST STREAM PT TO GET STEERING TO 1ST TRACK, SWITCHED BACK TO AUTO SEQ. DURING THE STREAM NCS SEQUENCED THROUGH ALL THE TRACKS EXCEPT THE LAST ONE.

1. In which ways did NCS aid in your ability to successfully conduct an AMCM mission? Describe in detail.

THE TOW PAGE GIVE GREAT SITUATIONAL AWARENESS, WITH THE ADDITION OF XTK + DIST FROM GIVES GREAT STEERING CUES.

2. In which ways did NCS hinder your ability to successfully conduct an AMCM mission? Describe in detail.

WHEN IT CYCLES ALL THE WAY THROUGH TO THE LAST TRACK I HAD

A HARD TIME ENTERING TRACKS AT THE END OF THE PSEQ, AT THAT PT I HAD TO CONCENTRATE ON ENTERING TRACK AND FELL BEHIND DOING NORMAL CO PILOT DUTIES

3. Did the NCS provide adequate steering cues and the ability to navigate precisely in the minefield?
(YES) NO If no, why? STD DEV 12 yds, W/ALL THE CONFUSION UP FRONT

4. Which NCS functions, if any, were particularly difficult, time consuming, or required too much focus in the cockpit?
EDITING PSEQ + MARK FUNCTIONS. [MARK PAGE IS TOO BUSY + WOULD BE IMPOSSIBLE TO EDIT IN FLT W/ MULTIPLE CONTACTS

5. Were there any failures or difficulties with the NCS encountered during the flight? (YES) NO Describe: CYCLING THROUGH THE TRACKS WHEN WE WERE STREAMING

6. Did you see any abnormal CWA's?
NO

7. Was critical mission information readily available?
TOO MANY BUTTONS TO PUSH TO GET TIME + FOM PAGE UP, TIME PAGE IS CRITICAL

8. Did you deviate from your MPS created flight plan? If (yes,) why and how?
Reentered TRACKS, AND FISH PROBLEMS FORCED EARLY RECOVERY

9. Do you foresee any AMCM tactical changes as a result of NCS integration?

NO, JUST LESS TIME SPENT PLANNING + PMA THE FLIGHTS w/ MORE INFO AVAILABLE

FROM TO P. 1

Post-it Fax Note 7671	Date	# of pages ▶ 5
To [redacted]	From LT G. GIBSON	
Co./Dept	Co. Nayr. P.G. School	
Phone #	Phone #	
Fax # 41 565 [illegible]	Fax	

Measurements

A) Distance to middle of the TSI lighted LCD scale ~~1 13/16~~ 5 1/2"

B) Distance to the middle of the TSI numerical readout ~~1 13/16~~ 5 1/4

C) Distance to middle of the TSI's skew bar ~~1 13/16~~ 5"

D) Distance to GSDA Ground Speed output 3 3/4"

E) Distance to GSDA arrow center 3 3/4"

F) Distance to middle of the HSI 5 1/8"

G) Distance to HSI's Course indication 3 3/4

H) Distance to HSI's miles indication 3 3/4

I) Distance to the middle of the mode select panel 8 3/4

PART 2

This part of the measurements I'm trying to get an idea of the approximate viewing areas of the ADI, TSI and HSI, see FIG 2.

1) ADI dimensions A1 4 1/8 & A2 3 1/16

2) TSI dimensions B1 2 11/16 & B2 2 11/16

3) HSI dimensions C1 4 3/8 & C2 3 7/16

PART 3.

For this next part you probably will need some assistance. I need you or someone you want to measure who is within normal pilot height/wt requirements to sit in the pilot seat in a normal flying position. The measurements need to be:

1) From the cockpit floor to the pilot's eye height. 41 3/4"

2) Approximate distance from the pilot's eye to the center of the ADI 30"

3) An estimate of the pilot's normal seat position

(i.e. full back & full down , 3 clicks back & 1 click up, etc)

full back & full down

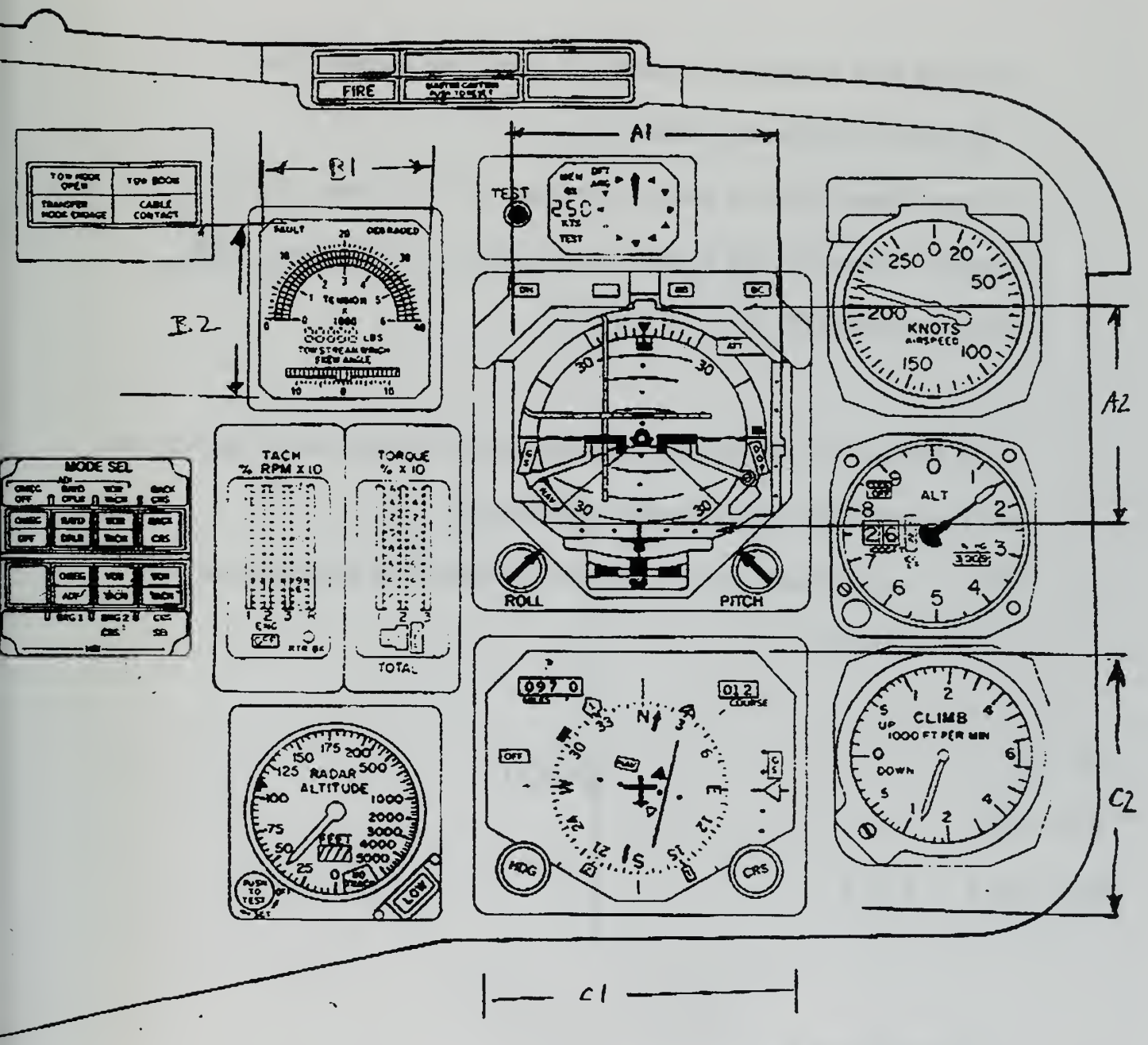

INSTRUMENT PANEL

S 75861 (C2)

FIG 2

4) With the pilot sitting on a hard surface (i.e. desk) and measure from the desk to the pilots eye height 32"

5) Approx distance from the pilot's eye to center of VO-30 screen 38 1/4"

6) Approx distance from the co- pilot's eye to center of VO-30 screen 38"

7) Pilot's estimated HT 71" & WT 162

As a last request if you have any pictures of the VO-30 and a natops like write up on it's functions this would be greatly appreciated.

A huge thanx to your & who ever you drafted into helping me out with my thesis.

The FAX # Here is

AV: 878 - 2313

HOOT

NYNU02A@PRODIGY.COM

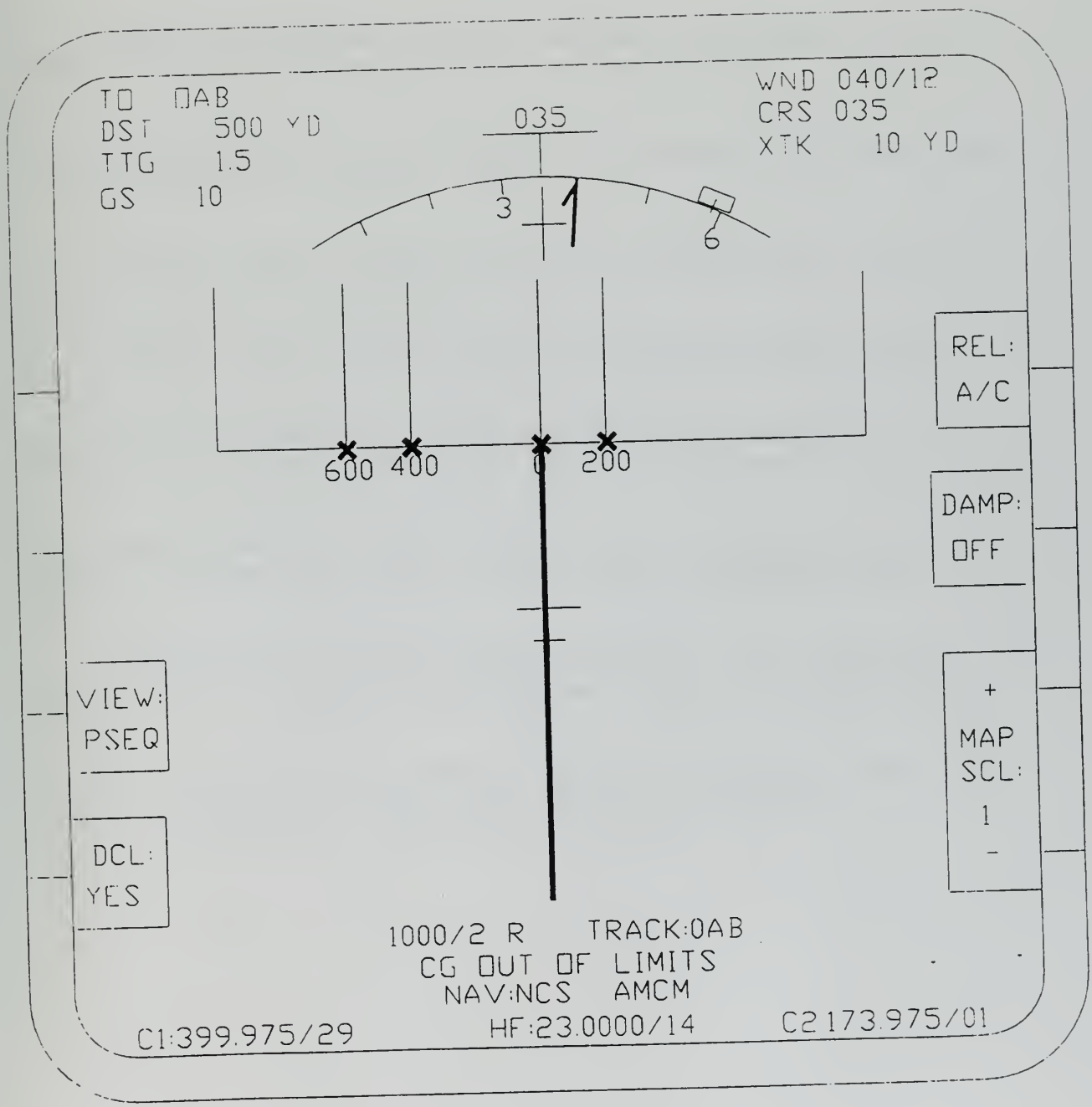
TO OAB
DST 500 YD
TTG 1.5
GS 10
WND 040/12
CRS 035
XTK 10 YD
035
3
6
600
400
0
200
REL:
A/C
DAMP:
OFF
VIEW:
PSEQ
+
MAP
SCL:
1
-
DCL:
YES
1000/2 R TRACK:OAB
CG OUT OF LIMITS
NAV:NCS AMCM
C1:399.975/29
HF:23.0000/14
C2 173.975/01

LIST OF REFERENCES

NASA. Human Factors Considerations in System Design. Greenbelt, Maryland, 1982.

Naval Air Systems Command, NATOPS Flight Manual Navy Model MH-53E, Philadelphia, Pennsylvania, 1993.

Prouty,W.Raymond. Helicopter Performance, Stability and Control. Malabar, Florida, 1990.

Petho,C.Frank. Human Factors in System Design OA3401 Draft. Monterey, California, 1992.

Petho,C.Frank. Human Factors in System Design OA3401 Class Slides. Monterey, California, 1995.

Van Cott,P.Harold and Kinkade,G.Robert. Human Engineering Guide to Equipment Design. Washington, D.C.

Dowd, Frank. Air Test and Evaluation Squadron One Phoncon (26 Nov 1996), Fax (27 Nov 1996), Patuxent River, MD.

EER Systems. Operator Familiarization Course MH-53E Navigation and Communication System. Vienna, Virginia, 1995.

Naval Air Systems Command, NATOPS Preliminary Draft of Proposed Changes for the Flight Manual Navy Model MH-53E, Philadelphia, Pennsylvania, 1993.

INITIAL DISTRIBUTON LIST

	No. Copies
1. Defense Technical Information Center 8725 John J. Kingman Rd., STE 0944 Ft. Belvoir, VA 22060-6218	2
2. Dudley Knox Library Naval Postgraduate School Monterey,CA 93943-5101	2
3. LT Gregory J. Gibson c/o Professor Conrad F.Newberry AA/Ne Naval Postgraduate School Monterey,CA 93940-5106	4
4. Professor Conrad F.Newberry AA/Ne Naval Postgraduate School Monterey,CA 93940-5106	6
5. Dr. Anthony P.Ciavarelli Aviation Safety School Naval Postgraduate School Monterey,CA 93940	2
6. Mr. William Capps Code C215A (4555 OOD) NAVAIRWARCENWPNDIV 1 Administration Circle China Lake,CA 93555-6001	1
7. Dr. John D. Anderson, Jr. University of Maryland Department of Aerospace Engineering College Park,MD 20742	1
8. Mr. Joe Nataro Code 4.6C NAWC-AD Warminster,PA 18974	1

9. Dr. Isaiah Blankson 1
Manager of University Research Programs
Office of Aeronautics
NASA Headquarters
Code RT
300 E Street,S.W.
Washington,D.C. 20546

10. Mr. Don Dennis Jackson 1
Department of the Navy
Naval Air Systems Command
Crew Systems Department Head
1421 Jefferson Davis Highway
Arlington, VA 22243-5120

11. Mr. Thomas A.Pavlik 1
Department of the Navy
Naval Air Systems Command
Crew Systems Division
Aircrew Systems
1421 Jefferson Davis Highway
Arlington, VA 22243-5120

12. Mr. John C. McKeown 1
Research and Engineering
Department of the Navy
Naval Air Systems Command
1421 Jefferson Davis Highway
Arlington, VA 22243-5120

13. Professor E. Roberts Wood 1
AA/Wd
Naval Postgraduate School
Monterey,CA 93940-5106

8 51NPS 740
TH
1/99 22527-200

DUDLEY KNOX
NAVAL POSTG
MONTEREY CA

DUDLEY KNOX LIBRARY
3 2768 00355827 1